INCH VERSION

Your Partner for Sealing Technology

Trelleborg Sealing Solutions is a major international developer, manufacturer and supplier of seals, bearings and molded components in polymers. We are uniquely placed to offer dedicated design and development from our market-leading product and material portfolio: a one-stop-shop providing the best in elastomer, silicone, thermoplastic, PTFE and composite technologies for applications in aerospace, industrial and automotive industries.

With 50 years of experience, Trelleborg Sealing Solutions engineers support customers with design, prototyping, production, test and installation using state-of-the-art design tools. An international network of over 70 facilities worldwide includes over 20 manufacturing sites, strategically-positioned research and development centers, including materials and development laboratories and locations specializing in design and applications.

Developing and formulating materials in-house, we utilize the resource of our material database, including over 2,000 proprietary compounds and a range of unique products. Trelleborg Sealing Solutions fulfills challenging service requirements, supplying standard parts in volume or a single custom-manufactured component, through our integrated logistical support, which effectively delivers over 40,000 sealing products to customers worldwide.

Facilities are certified to ISO 9001:2008 and ISO/TS 16949:2009. Trelleborg Sealing Solutions is backed by the experience and resources of Trelleborg Group, one of the world's foremost experts in polymer technology.

ISO 9001:2008 **ISO/TS 16949:2009**

The information in this brochure is intended to be for general reference purposes only and is not intended to be a specific recommendation for any individual application. The application limits for pressure, temperature, speed and media given are maximum values determined in laboratory conditions. In application, due to the interaction of operating parameters, maximum values may not be achieved. It is vital therefore, that customers satisfy themselves as to the suitability of product and material for each of their individual applications. Any reliance on information is therefore at the user's own risk. In no event will Trelleborg Sealing Solutions be liable for any loss, damage, claim or expense directly or indirectly arising or resulting from the use of any information provided in this brochure. While every effort is made to ensure the accuracy of information contained herewith, Trelleborg Sealing Solutions cannot warrant the accuracy or completeness of information.

To obtain the best recommendation for a specific application, please contact your local Trelleborg Sealing Solutions marketing company.
This edition supersedes all previous brochures. This brochure or any part of it may not be reproduced without permission.

® All trademarks are the property of Trelleborg Group. The turquoise color is a registered trademark of Trelleborg Group. © 2017, Trelleborg Group. All rights reserved.

Hydraulic Seals – linear

Contents

Introduction

Rod Seals

Piston Seals

Scrapers

Slydring® - Wear Rings

Dualseal

SEALING TECHNOLOGY

Trelleborg Sealing Solutions offers an outstandingly comprehensive sealing portfolio – a one-stop-shop providing the best in elastomer, silicone, thermoplastic, PTFE and composite technologies; solutions that feature in virtually every application conceivable within the aerospace, industrial and automotive industries.

A WORLDWIDE PRESENCE

We are uniquely placed to offer a dedicated design and development service for sealing solutions; globally servicing, supporting and supplying customers through an unrivaled international network.

COMMITMENT – TO CUSTOMERS, NEEDS LONG-TERM

Trelleborg Sealing Solutions is one of the world's foremost experts in polymer sealing technology. Using our expertise and experience, we facilitate customers in achieving cost-effective, durable solutions that match their specific business requirements.

For more information watch the Trelleborg movie on the Trelleborg website: **www.tss.trelleborg.com**

A world leader in engineered polymer solutions

THE TRELLEBORG GROUP

Trelleborg Coated Systems
Leading global supplier of unique customer solutions for polymer-coated fabrics deployed in a variety of industrial applications.

Trelleborg Industrial Solutions
Market leader in such industrial application areas as hose systems, industrial antivibration solutions and selected industrial sealing systems.

Trelleborg Offshore & Construction
Leading global supplier of polymer-based critical solutions for deployment in highly demanding environments.

Trelleborg Wheel Systems
Trelleborg Wheel Systems is a leading global supplier of tires and complete wheels for agricultural and forestry machines, materials handling and construction vehicles, and two-wheeled vehicles.

Trelleborg Sealing Solutions
One of the world's leading developers, manufacturers and suppliers of precision seals. It supports its aerospace, industrial and automotive customers through over 20 production facilities and more than 50 marketing companies globally.

THE BLUE DIMENSION™

At Trelleborg, we believe that the benefits of our solutions stretch beyond functionality and business performance. For more information visit **http://trelleborg.com/bluedimension**

Americas

- 1 R&D Center
- 14 Marketing Companies
- 1 Logistics Center SCM
- 10 Manufacturing Sites
- Damping Solutions
- 2 Automotive Hubs
- 5 Aerospace Hubs

TRELLEBORG

9	Research & Development Centers
53	Marketing Companies
4	Logistics Centers
28	Manufacturing Sites
	Damping Solutions
5	Automotive Hubs
9	Aerospace Hubs

5,800
employees

82
worldwide locations

More than
2,000
proprietary material formulations

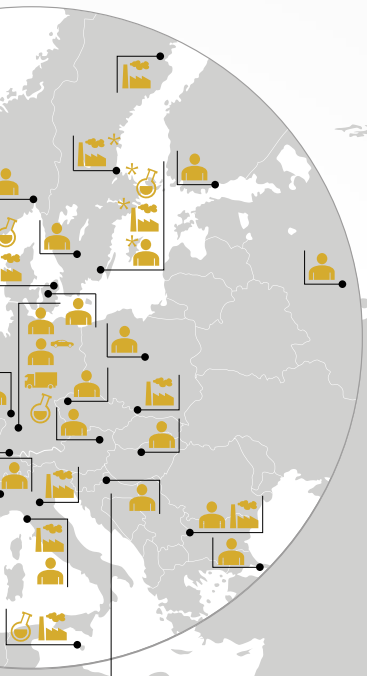

Europe

- 7 R&D Centers
- 22 Marketing Companies
- 1 Logistics Center SCM
- 16 Manufacturing Sites
- Damping Solutions
- 1 Automotive Hub
- 2 Aerospace Hubs

Asia

- 1 R&D Center
- 17 Marketing Companies
- 2 Logistics Centers SCM
- 2 Manufacturing Sites
- Damping Solutions
- 2 Automotive Hubs
- 2 Aerospace Hubs

Decades of experience designing and manufacturing polymer solutions has led Trelleborg Sealing Solutions to develop, manufacture and supply a range of unique materials and proprietary product designs, many of which have become industry standards. Development is ongoing, ensuring that our solutions meet the changing needs of our customers, as well as the latest industry trends and regulations.

WORLD RENOWNED NAMES UNITED

We own many of the longest established and leading names within the seal industry. These include:

- **American Variseal**
- **Busak+Shamban**
- **Dowty Seals**
- **Chase Walton**
- **Forsheda**
- **GNL**
- **Impervia**
- **Nordex**
- **Orkot**
- **Palmer Chenard**
- **Polypac**
- **SSF**
- **SF Medical**
- **Shamban**
- **Silcofab**
- **Silcotech**
- **Skega**
- **Stefa**
- **Wills**

PROPRIETARY MATERIALS

Ongoing development has yielded some of the most successful sealing and bearing materials available.

- **HiMod®**
- **Isolast®**
- **Orkot®**
- **Turcite®**
- **Turcon®**
- **Turel®**
- **Zurcon®**

OUR PIONEERING PRODUCTS

Trelleborg Sealing Solutions is pioneering and is continuously developing innovative products.

- **Turcon® AQ Seal®**
- **D-A-S Compact Seal®**
- **Turcon® Double Delta®**
- **Turcon® Excluder®**
- **Turcon® Glyd Ring® T**
- **Turcon® Hatseal**
- **Zurcon® L-Cup®**
- **Turcite® Slydring®**
- **Turcite® B-Slydway®**
- **Turcon® Stepseal® 2K**
- **Turcon® Stepseal® V**
- **V-Ring®**
- **Turcon® Varilip® PDR**
- **Turcon® Variseal®**
- **Turcon® VL Seal®**
- **Turcon® Wedgpak®**
- **Wills Rings®**
- **Zurcon® Wynseal**

To design a solution for your specific needs, contact your local Trelleborg Sealing Solutions marketing company.

SEEING IS BELIEVING

Complex sealing configurations can feature a large number of sealing elements. Trying to illustrate these on a 2-D page is difficult and can never properly show their function or characteristics. Trelleborg Sealing Solutions turned to the latest graphic technologies to produce 3-D animations of applications and typical sealing solutions for them.

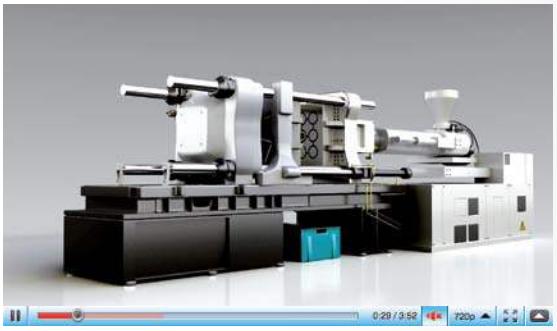

View at
YouTube.com/ trelleborgseals

View at
tss.trelleborg.com/ films

Online 24-7

A range of films specific to different industries and products are available to view on the Trelleborg Sealing Solutions website or via YouTube.

Turcon® Roto L
Energy saving with no friction

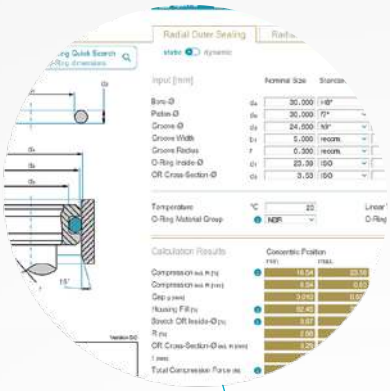

ONLINE TOOLS MAKE LIFE EASIER

Trelleborg Sealing Solutions has developed a number of online tools that make the working life of an engineer specifying seals easier. All these industry-leading tools are available free-of-charge from the Trelleborg Sealing Solutions website at www.tss.trelleborg.com. To use these advanced services all you have to do is register on the Members Area.

There is also a continually increasing range of innovative engineering apps available for smartphones, both for iOS and Android devices. Just search for "Trelleborg" in the App Store or GooglePlay to find the tools to optimize your daily productivity.

Materials Search and Chemical Compatibility Check

These two programs allow you to find out the compatibility of sealing materials with hundreds of different media and help identify the most suitable material for your application.

- Very good suitability
- Good suitability
- Limited suitability
- Unsuitable
- Insufficient information

Versatile CAD Service

The CAD download facility provides thousands of drawings of a wide range of seals. It gives the option of 2- or 3-dimensional files in a range of formats to suit most commonly used CAD systems.

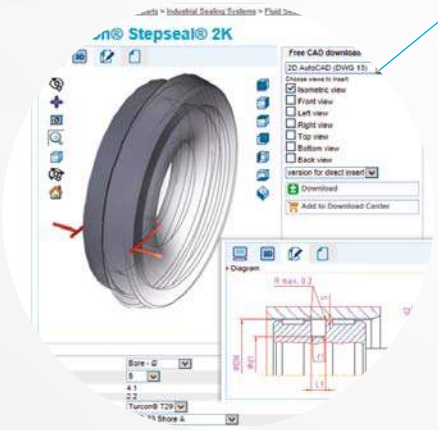

O-Ring Calculator

An industry-leading tool, the easy to use O-Ring calculator includes sizing capabilities, compression forces, design parameter recommendations and complete measurements. Results and comments may be printed, shared or filed as PDF.

Sealing Solutions Configurator

The Sealing Solutions Configurator is the first tool of its kind offered by any seal supplier. It allows engineers to identify a proven sealing solution for their specific application in just four easy steps.

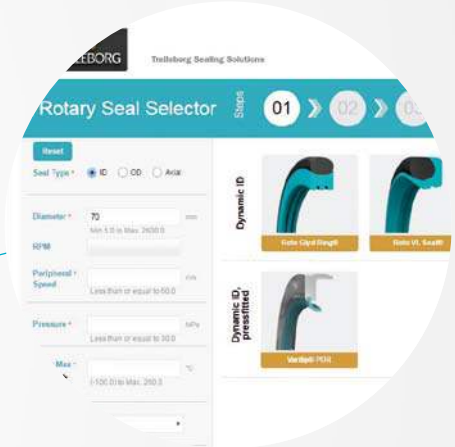

Rotary Seal Selector

The Rotary Seal Selector allows you to search through the wide range of rotary seals and materials available based on application conditions and offers detailed information on installation and seal capabilities.

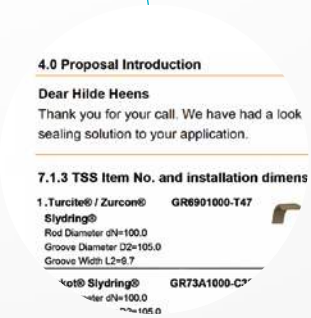

Technical Proposals Online

Enhance your communication with Trelleborg Sealing Solutions with the Technical Proposals Online tool. Instantly access all your proposed solutions anywhere at any time and benefit from quicker dialog with our sealing specialists.

For more information
www.tss.trelleborg.com

We understand the needs of engineers on the go. Check out our latest mobile tools and apps, ranging from an O-Ring calculator to unit and hardness converters. Just search for "Trelleborg" in the App Store or Google Play to find the tools to optimize your daily productivity.

Android App on
Google Play

MANY MORE APPS available

Available on the
APP STORE

For more information
www.tss.trelleborg.com

ISO Fits & Tolerances

Simply enter the nominal diameter and select the tolerance classes for bore and shaft to find the complete ISO fits definition with all relevant values including type of fit, with handy graphs to illustrate the classes by bore and shaft.

Technical Glossary

This app provides definitions of more than 2,000 terms from the world of sealing technology and engineering.

Aerospace Groove Selector

This app covers two of the most important SAE aerospace groove standards for hydraulic systems, AS4716 Rev B and AS5857 Rev A, making it really easy to find the size of grooves and hardware needed.

Installation Instructions

Videos demonstrate the best practice methods for installing seals, providing all relevant documentation within the interface, guiding you to a successful installation of Radial Oil Seals and Turcon® and Zurcon® rod and piston seals.

Unit & Hardness Converter

Intuitive and very easy to use, simply select the dimension and enter the value for conversion. The app offers a wide range of engineering and scientific units for each dimension.

in the groove

Our *in the groove* magazine provides news, technical and product information on seals, as well as insights into the markets they are used in. The magazine is also available in print and as an interactive PDF.

Rotary Selector

Bring the popular Rotary Seal Selector webtool with you! Quickly search through Trelleborg Sealing Solutions rotary seals and materials for the optimum product for your application conditions while on the move.

O-Ring Selector

When a user enters installation specifications into the O-Ring Selector app, such as the bore or rod/shaft diameter, the app quickly calculates O-Ring and housing dimensions in both metric and inch.

Hydraulic Cylinder Calculator

Quickly calculate areas and volumes in cylinders, extraction and retraction forces, time velocity and outflow by entering the requisite dimensions and parameters of the cylinder. In compliance with ISO 3320, ISO 3321 and ISO 4393.

Area and Volume Calculator

Speeds up and simplifies calculating the area and volumes of more than 80 geometric shapes. The app supports both metric and imperial units and conveniently displays the formulas used. Fill your shape with solids or liquids, choosing from 1500 different materials, to calculate the weight.

Material Compatibility

View a quick and easy overview of the compatibility of 34 materials with 35 chemical environments that are commonly encountered in the healthcare and medical industries. Select up to 20 materials and environments at once to produce a chart rating each material from "excellent" to "not recommended".

Sealing Materials Selector

Enter material specifications and required parameters, such as application temperature or hardness, to receive instant material proposals. The app features filters to limit searches based on chemical compatibility, institute approvals and product type and data sheets can be requested from within the interface.

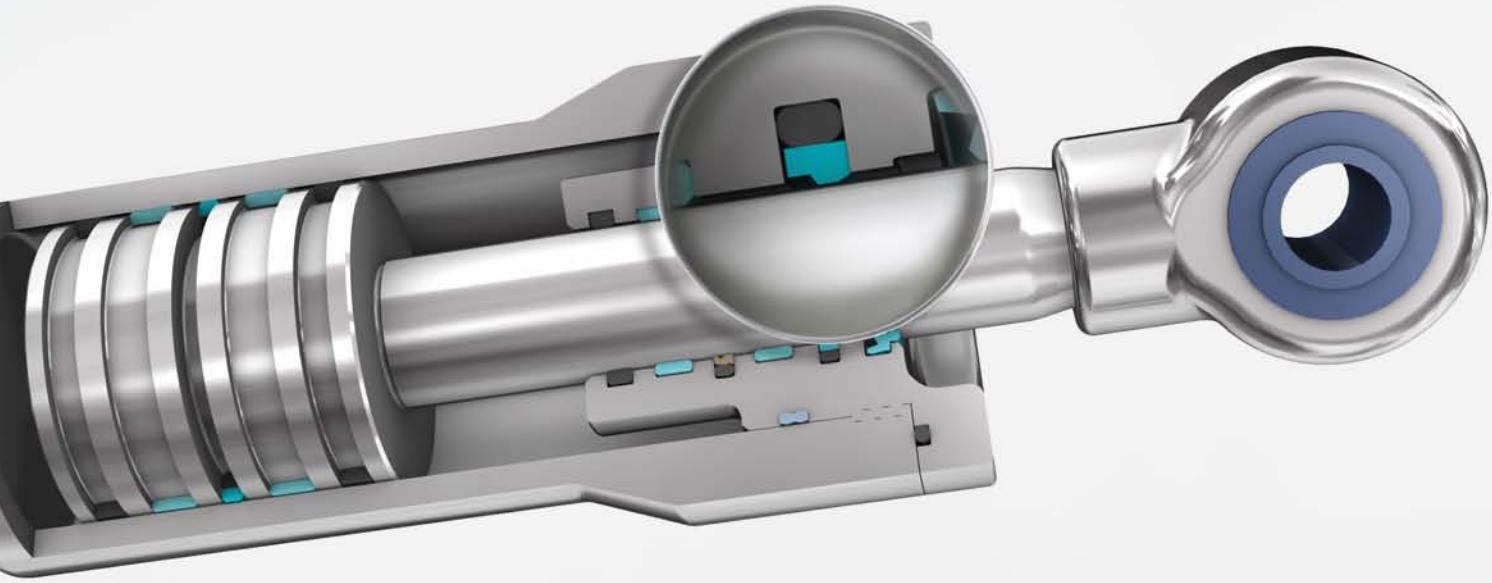

Contents

22	Choice of Sealing Element
26	Design Instructions
28	Installation Instructions
32	Quality Criteria
32	Storage information
35	Turcon® Stepseal® 2K
47	Turcon® Stepseal® V
57	Zurcon® U-Cup RU9
65	Zurcon® Rimseal
73	Zurcon® Buffer Seal
81	Turcon® Glyd Ring® T
89	Turcon® Glyd Ring®
99	Turcon® Glyd Ring® C
107	Turcon® VL Seal®
115	Turcon® Variseal® M2
123	Turcon® Double Delta®

■ Choice of the Sealing Element

Sealing elements have a decisive influence on the design, function and service life of hydraulic and pneumatic cylinders and systems.

This applies equally to the piston rod seals where leak tightness, resistance to wear and gap extrusion, resistance to process media, resistance to high and low temperatures, low friction, compact form and simple installation are demanded in order to meet the requirements of industry for a functional sealing solution.

The significance of these parameters and their limits generally depends on the requirements of the specific application. Trelleborg Sealing Solutions has therefore developed a complete range of seals which, due to their optimized geometries and designs and the use of high-quality materials such as Turcon® and Zurcon® , satisfy the technical and economic demands of the industry in full.

In order to be in a position to select the most appropriate seal type and material, it is necessary to first define all the desired functional parameters. Table 1 can then be used to make an initial selection of seals and materials according to the specific requirements of the application.

The second column of the table contains the number of the page on which further general information together with specific design and installation instructions on the particular seal type and materials (or material combinations with multi-element seals, e.g. Turcon® Stepseal® 2K) can be found.

Furthermore on page 27, attention is drawn to the quality of the mating surface. We recommend that the limits specified there be observed, as they have a decisive influence on the functionality and service life of the system.

The final choice of seal type and material must also take into account detailed information on the seal elements.

Please do not hesitate to contact our Technical Department for further information on specific applications and special technical questions.

This catalog is a compilation of the preferred product ranges of Trelleborg Sealing Solutions. All similar products are technically equivalent but availability and pricing may vary. For further information please contact your local Trelleborg Sealing Solutions sales office.

NOTE ON ORDERING

All multi-element standard rod seals, e.g. Turcon® Stepseal® 2K, are generally supplied as complete seal sets. The supply includes the seal and matching elastomer energizing elements. The O-Ring does not have to be ordered separately. It is also possible to use other O-Ring materials from our O-Ring catalog.

For all new applications, we recommend the use of the seal types and preferred sizes (ISO series, wherever possible) listed in this catalog.

Other combinations of materials and special designs can be developed and supplied for special applications in all intermediate sizes up to 102 inches (2,600mm) diameter, provided there is sufficient demand.

The sizes contained in this catalog are mostly available from stock or can be supplied at short notice. We reserve the right to modify our supply program.

Table 1: Selection Criteria for Rod Seals

Seal		Application				Standard	Size Range	Action		Technical Data*			Recommended Seal Material
		Field of Application								Temp. Range **	Velocity	Pressure	
Type	Page		Light	Medium	Heavy	ISO/DIN	Inch	Single	Double	°F	ft/s	PSI Max.	
Turcon® Stepseal® 2K	35	Mobile hydraulics	•	•	•	7245-2	.125-102	•		-49/ +392	50	7,250	Turcon® M12
		Standard cylinders	•	•	•								
		Machine tools	•	•	•							7,250	Turcon® T46
		Injection molding machines	•	•	•								
		Presses	•	•	•							2,900	Turcon® T05
		Automotive industry	•	•	•								
		Hydraulic hammers	•	•	•		.125-86			-49/ +230	6.5	8,700	Zurcon® Z53
		Servo hydraulic	•	•	•								
Turcon® Stepseal® V	47	Mobile hydraulics	•	•	•	7425-2	.125-25.499	•		-49/ +392	50	7,250	Turcon® M12
		Construction equipment	•	•	•								
		Presses	•	•	•							7,250	Turcon® T46
		Injection molding machines	•	•	•								
Zurcon® U-Cup RU9	57	Hydraulic cylinders	•	•		5597/1	.375-12	•		-58/ +266	1.65	5,800	Zurcon® Z20
		Industrial hydraulics	•	•									
		Mobile hydraulics	•	•									Zurcon® Z22
Zurcon® Rimseal	65	Mobile hydraulics	•	•	•	7425-2	.313-86	•		-49/ +230	In tandem with Turcon® Stepseal® 2K 16 Ft/s	In tandem 8,700 As single seal 3,625	Zurcon® Z54
		Standard cylinders	•	•	•								
		Machine tools	•	•	•								
		Injection molding machines	•	•	•								
		Presses	•	•	•								
Zurcon® Buffer Seal	73	Earthmoving Equipment		•	•	7425-2	1.500-7.875	•		-31/ +230	3.3	5,800	Zurcon® Z20
		Mobile hydraulics		•	•								
		Construction Machinery		•	•								Zurcon® Z22

* The data below are maximum values and cannot be used at the same time. The maximum pressure depends on temperature and gap dimension.
** Temperature range depends on choice of elastomer material and media.

Seal		Application				Standard	Size Range	Action		Technical Data*			Recommended Seal Material
										Temp. Range **	Velocity	Pressure	
Type	Page	Field of Application	Light	Medium	Heavy	ISO/DIN	Inch	Single	Double	°F	ft/s	PSI Max.	
Glyd Ring® T	81	Special cylinders	•	•	•	7425-2	.313-102		•	-49/+392	50	7,250	Turcon® M12
		Pumps and valves	•	•	•								
		Machine tools	•	•	•							7,250	Turcon® T46
		Robotics/manipulators	•	•	•								
		Presses	•	•	•		.313-86			-49/+230	6.5	8,700	Zurcon® Z51
Glyd Ring®	89	Special cylinders	•	•	•	7425-2	.313-102		•	-49/+392	50	7,250	Turcon® M12
		Pumps and valves	•	•	•							7,250	Turcon® T46
		Machine tools	•	•	•							2,900	Turcon® T05
		Servo equipment	•	•	•		.313-86			-49/+230	6.5	8,700	Zurcon® Z53
Glyd Ring® C	99	Special cylinders	•	•	•	-	.125-15		•	-49/+392	50	7,250	Turcon® M12
		Pumps and valves	•	•	•							7,250	Turcon® T46
		Machine tools	•	•	•							2,900	Turcon® T05
		Robotics/manipulators	•	•	•								
Turcon® VL Seal®	107	Automation	•	•	•	-	.375-102	•		-49/+392	50	7,250	Turcon® M12
		Telescopic cylinders	•	•	•							7,250	Turcon® T46
		Valve stems	•	•	•		.375-86			-49/+230	6.5	3,625	Zurcon® Z54
		Down-hole tools	•	•	•								
Turcon® Variseal® M2	115	High and low temperatures	•	•		AS4716	.125-102	•		-94/+572	50	5,800	Turcon® T40
		Aggressive media	•	•								2,900	Turcon® T05
		Food-contact	•	•									
Double Delta®	123	Valve stems	•	•		-	.080-40		•	-49/+392	50	2,900	Turcon® T05
		Mini hydraulics	•	•								5,000	Turcon® M12
		Hydraulic tools	•	•								5,000	Turcon® T46

* The data below are maximum values and cannot be used at the same time. The maximum pressure depends on temperature and gap dimension.
** Temperature range depends on choice of elastomer material and media.

REDUNDANT SEALING SYSTEM

Sealing of environmentally harmful fluids has led Trelleborg Sealing Solutions to develop innovative sealing systems to meet the ever demanding industry specifications with regard to leak-free performance and high service life.

In heavy duty applications, leak free performance and high service life cannot be assured by a single sealing element; therefore, specially developed system seals are arranged in series, building a tandem arrangement.

Each sealing element in a system has its specific function and their interaction needs to be secured to get a redundant sealing system.

The primary seal in PTFE based proprietary Turcon® material generates low friction and has excellent wear and extrusion resistance under extreme working conditions. It allows a fine lubrication film passing this first barrier, ensuring the necessary lubrication of the secondary sealing element for long service life.

The tandem arrangement requires an outstanding backpumping ability of the primary seal and the secondary seal, if a double acting scraper is installed. A combination of different sealing materials in a system, Turcon® and Zurcon® , (PTFE and Polyurethane) ensures the best sealing performance.

Trelleborg Sealing Solutions has pioneered work in this area and continues development of redundant sealing today.

Outstanding solutions to such applications have been the Turcon® Stepseal® 2K in tandem arrangement.
A tandem sealing system can also be created by using e.g. Zurcon® Rimseal, Zurcon® U-Cup RU9 or U-Cup as secondary sealing elements. Depending on type of secondary seal, a single- or double acting scraper completes the system, to offer the highest possible operation reliability, ensuring both adequate lubrication of the sealing system and a long service life.

Figure 1 shows an example of a redundant sealing system consisting of Turcon® Stepseal® 2K, Zurcon® Rimseal and Rod Scraper DA 22 with corresponding wear ring arrangement.

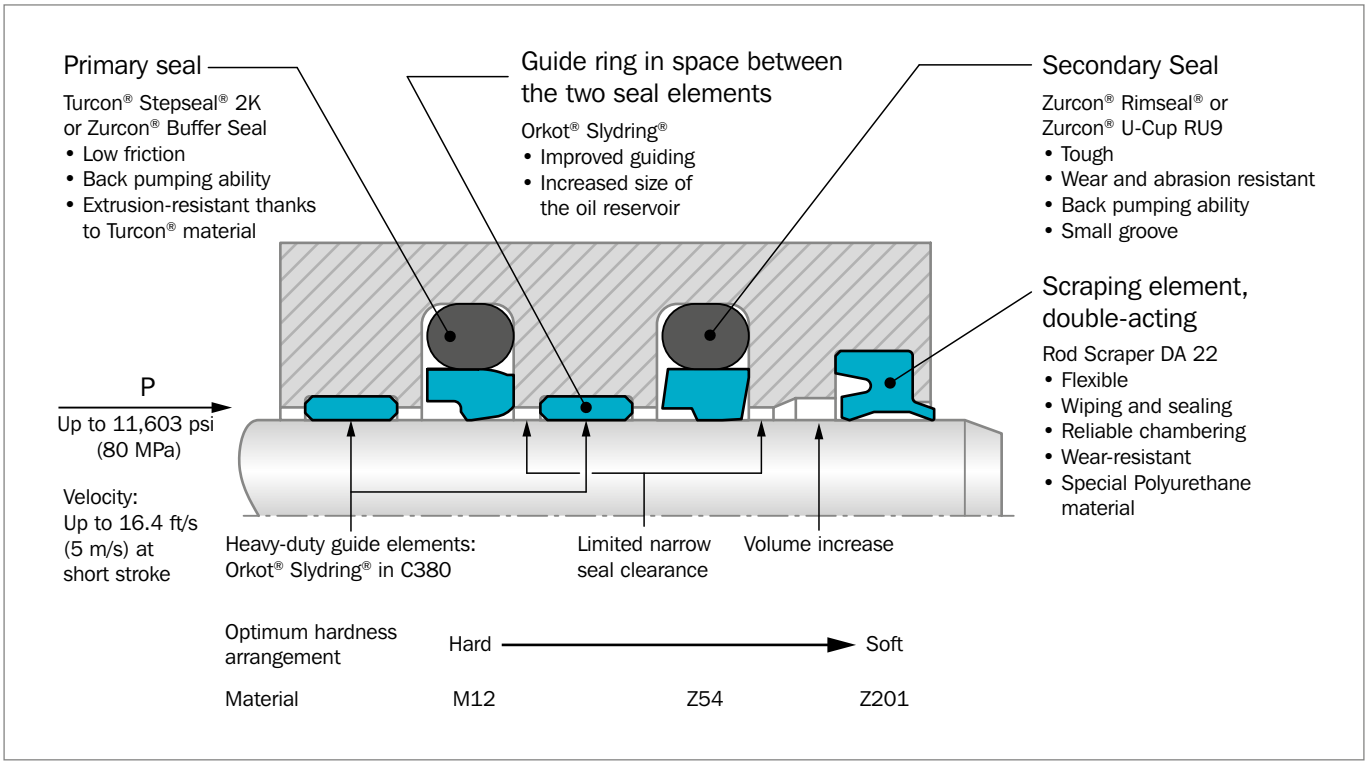

Figure 1: Example of a Redundant Modular Sealing System

■ Design Instructions

LEAD-IN CHAMFERS

In order to avoid damage to the rod seal during installation, lead-in chamfers and rounded edges must be provided on the piston rods (see Figure 2). If this is not possible for design reasons, a separate installation tool must be used.

The minimum length of the lead-in chamfer Z_{min} depends on the profile size of the seal and can be seen from the following tables.

Generally Z_{min} from Table 2, Table 3 and Table 4 is recommended but at 15° Z must also exceed 2.5% of the rod diameter d_N (relevant for large diameter rods). At 20° Z is calculated correspondingly.

The rod should have a lead-in chamfer of 15° to 20° by Z length minimum to gently guide the seal assembly into the hardware as shown in Figure 2. The chamfer should clear the seal assembly - in a free condition - after the seal has been calibrated.

Table 2: Elastomer Energized Seals

Minimum chamfer for a calibrated seal.

Groove Width L_1*	Lead-in Chamfer Length Z_{min}	
	15°	20°
.087	.098	.079
.126	.118	.098
.165	.138	.118
.248	.197	.157
.319	.256	.197
.374	.295	.217
.543	.413	.315

* The groove width can be found in the table Installation Dimensions for Turcon® Glyd Ring® , Glyd Ring® T, Glyd Ring® C, AQ Seal® , Stepseal® 2K, Stepseal® V, and Zurcon® Wynseal® M

Table 3: Double Delta®

Minimum chamfer for a calibrated seal.

O-Ring Cross Section** d_2		Lead-in Chamfer* Length Z_{min}	
		15°	20°
.070	-	.098	.079
.094	.103	.118	.098
.118	.139	.138	.118
.210	.225	.197	.157
.275	-	.256	.197
.331	-	.295	.217

* Though not less than 2.5% of rod diameter.
**The O-Ring cross section d_2 can be found in the appropriate table "Installation Dimensions", from chapter Double Delta® .

Table 4: U-Cups and Variseal®

Minimum for a calibrated seal (Variseal®)

U-Cup Groove Depth*	Variseal® M2 Series	Lead-in Chamfer Length Z_{min}	
		15°	20°
.118 / .138 / .157		.098	.059
.197		.098	.059
.236 / .256		.118	.079
.295 / .315	RVAA	.177	.118
.393	RVAB/RVAC	.197	.157
.472		.256	.236
.590	RVAD	.295	.256
.787		.394	.335
	RVAE	.472	.354
	RVAG	.669	.512

* The groove depth is calculated from: $(d_1 - d)/2$. The dimensions for d_1 and d can be found in the tables, "Installation dimensions".

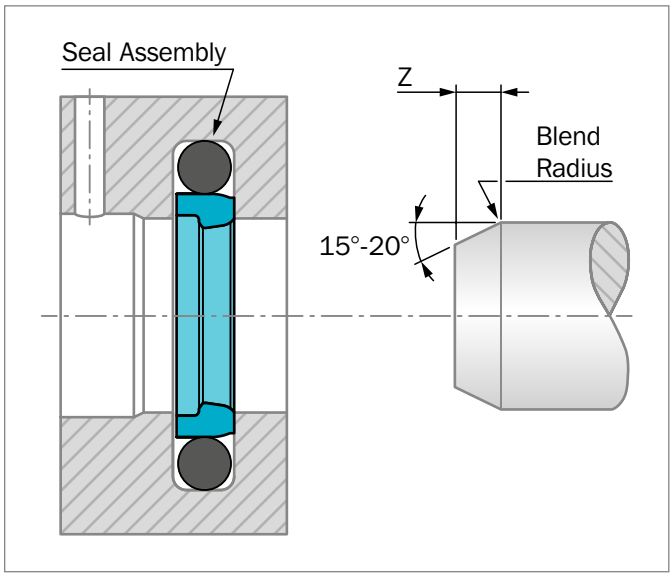

Figure 2: Lead-in chamfers

DISTANCE BETWEEN GROOVES

When installing tandem seal arrangement or double-acting scraper seals in conjunction with rod seals with back pumping effects such as Turcon® Stepseal® 2K and Zurcon® Rimseal, we recommend the following arrangement:

- Distance between seal grooves and/or scraper seal groove L = at least groove depth X
- Oil reservoir for collecting the returning oil as shown in Figure 3.

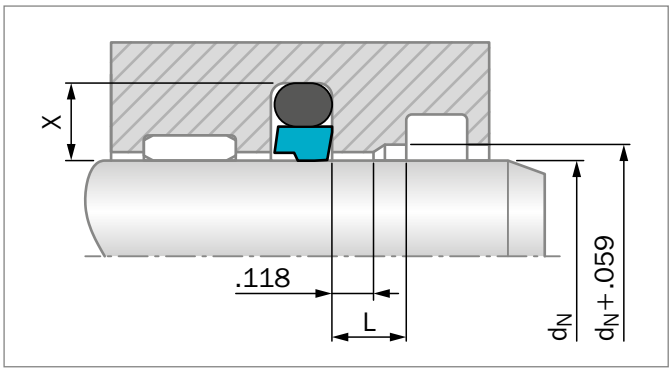

Figure 3: Recommendation for groove spacings between grooves

SURFACE ROUGHNESS DIN EN ISO 4287

The functional reliability and service life of a seal depend to a very great extent on the quality and surface finish of the mating surface to be sealed.

Scores, scratches, pores and concentric or spiral machining marks are not permitted. Higher demands must be made on the surface finish of dynamic surfaces than of static mating surfaces.

The characteristics most frequently used to describe the surface microfinish R_a, R_z and R_{max} are defined in DIN EN ISO 4287. These characterics alone, however, are not sufficient for assessing the suitability in seal technology. In addition, the material contact area of the surface roughness profile M_r in accordance with DIN EN ISO 4287 should be demanded. The significance of this surface specification is illustrated in Figure 4. It shows clearly that specification of R_a and R_z alone do not describe the surface roughness profile accurately enough for the seal technology and is thus not sufficient for assessing the suitability. The material contact area M_r is essential for assessing surfaces, as this parameter is determined by the specific surface roughness profile. This in turn is directly dependent on the machining process employed.

Trelleborg Sealing Solutions recommends that the following surface finishes be observed:

Table 5: Surface Roughness

Surface Roughness µinch			
Parameter	Mating Surface		Groove Surface
	Turcon® Materials	Zurcon® and Rubber	
R_{max}	25 - 100	40 - 160	<625
R_z	16 - 63	25 - 100	<400
R_a	2 - 8	4 - 16	<63

The material contact area M_r should be approx. 50 to 70%, determined at a cut depth c = 0.25 x R_z, relative to a reference line of $C_{ref.}$ 5%.

Surface profile µinch	R_a	R_z	M_r
closed profile form	4	40	70%
open profile form	8	40	15%

Figure 4: Profile forms of surfaces

Figure 4 shows two surface profiles, both of which exhibit nearly the same value for R_z in the test procedure. The difference becomes obvious only when the material contact area of the surface roughness profiles are compared. These show that the upper roughness profile with (M_r = 70%) has the better seal/mating surface ratio.

HARDWARE

For optimum performance Trelleborg Sealing Solutions recommends a piston rod of chrome-plated steel.

Material:	Preferably 42CrMo4V, purity class K3 to DIN 50602
Induction hardened	min. HRC 45
Hardening depth	min. 0.1 inches

Ground and hard chrome-plated, coating thickness .0008 to .0012 inch, polished

Roughness	R_a 4 to 12 µinch max. corresponding to N4 DIN/ISO 1302
Material contact area	M_r = 50 to 70%
Cut depth	c = 0.25 x R_z

For other rod materials, special coatings and treatments, please contact your local Trelleborg Sealing Solutions Company.

Installation Instructions

The following points should be observed before installation of the seals:

- Ensure the piston rod has a lead-in chamfer; if not, use an installation sleeve
- Deburr and chamfer or round sharp edges, cover the tips of screw threads
- Remove machining residues such as chips, dirt and other foreign particles and carefully clean all parts
- The seals can be installed more easily if the rod is greased or oiled. Attention must be paid to the compatibility of the seal materials with these lubricants. Use only grease without solid additives (e.g. molybdenum disulphide or zinc sulphide)
- Use no sharp-edged installation tools

INSTALLATION IN SPLIT GROOVES

Installation in split grooves is problem-free. The sequence of installation corresponds to the configuration of the seal, whereby the individual seal elements must not be allowed to twist. During final installation (insertion of the piston rod into the seal), elastomer or spring-energized seals must be sized. The piston rod itself can be used for this purpose, provided that it has a long lead-in chamfer, or use a sizing sleeve.

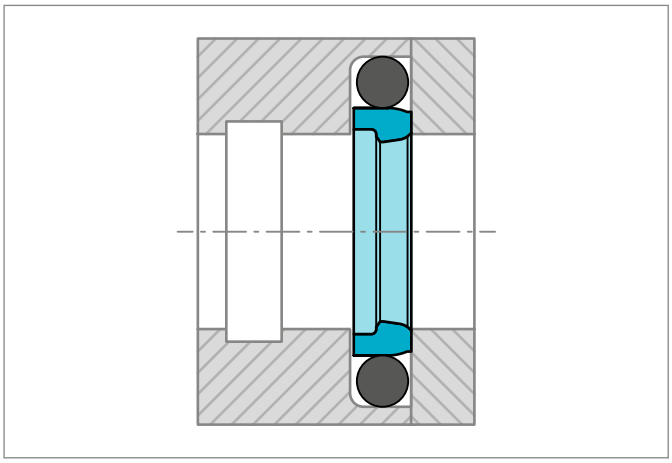

Figure 5: Installation in a split groove

INSTALLATION IN CLOSED GROOVES

By following the instructions in each seal type description (sizes for closed or split grooves) or using the light series for Turcon® seals, it will result in a problem-free installation of our rod seal elements of small diameters.

For Zurcon® and polyurethane (not Turcon®) seals, the use of installation tools is recommended. If installation has to be performed without installation tools, the following points should be observed:

- Place the O-Ring into the groove (not necessary with U-Cups)
- Compress the Turcon® or Zurcon® seals into a kidney shape. The seal must have no sharp bends (Figure 6)!

When a rod seal with notches is folded into a kidney shape, take care to avoid bending the seal at the position of the notches as this may cause overstretch or damage to the seal material.

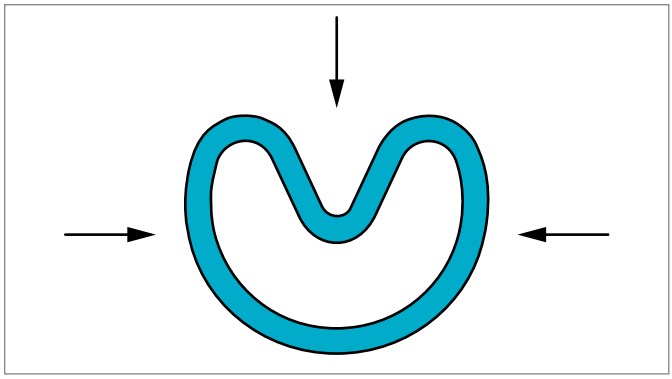

Figure 6: Kidney-shaped deformation of the seal ring

- Place the seal ring in compressed form into the groove and push against the O-Ring in the direction of the arrow (Figure 7).

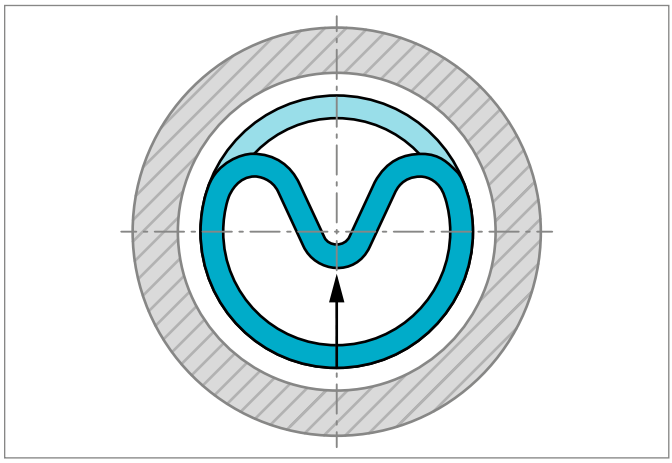

Figure 7: Inserting the seal ring into the closed groove

- After placing into the groove, form the seal into a ring again in the groove by hand.
- Finally size the seal ring using a mandrel which should have a chamfer of 15° to 20° over at least the lead-in chamfer length Z_{min} x 2 see Table 2.

The sizing mandrel should be made from a polymer material (e.g. polyamide) with good sliding characteristics and high surface quality in order to avoid damage to the seals.

The piston rod itself can also be used for calibration, provided it has a sufficiently long lead-in chamfer.

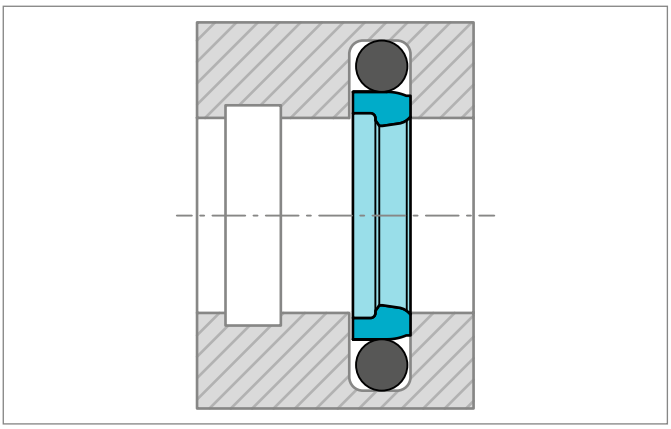

Figure 8: Installation in a closed groove

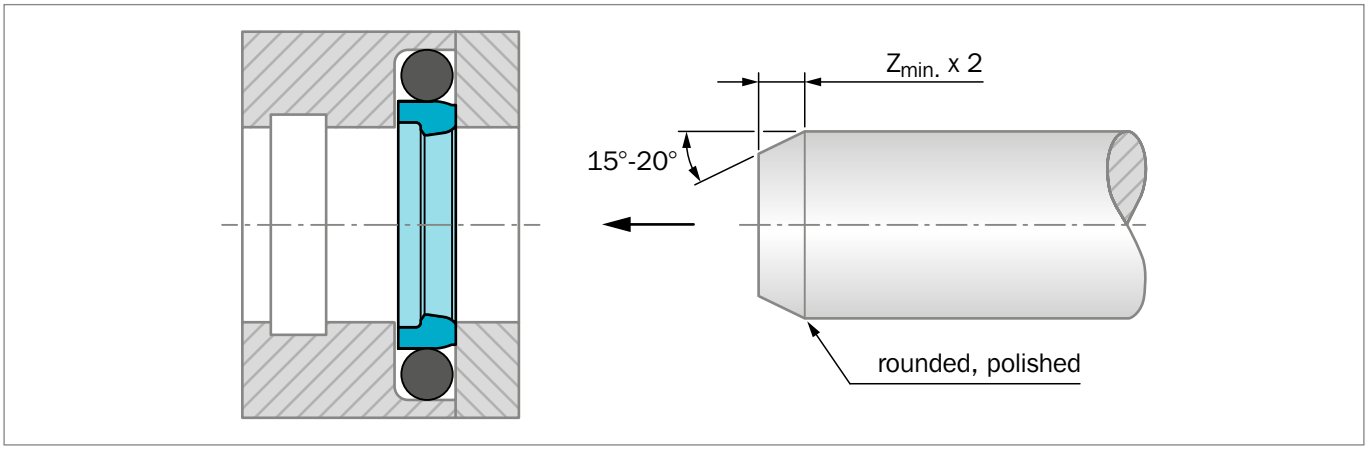

Figure 9: Calibration of the installed seal

Table 6: Closed groove installation for Turcon® rod seals

Glyd Ring® and seals for similar groove sizes can be installed in closed grooves above the following rod diameters*:

O-Ring Series	Rod Diameter $Ød_N$ (in)	Materials
0	≥.475	Turcon® M12, T05, T08, T10, T29, T40 and T46 Zurcon® Z53, Z54 and Z80
100	≥.625	
200	≥.750	
300	≥1.500	
400	≥2.750	
400 H	≥7.875	
.331**	≥10.000	
.472***	≥25.500	

* For diameter d_N below 1.181 inches (30mm) and/or not very accessible grooves it is often essential to use installation tools.

** O-Ring cross section according to SMS 1586.

*** The energizer can have a special shape.

INSTALLATION OF TURCON® DOUBLE DELTA®

Installation in closed grooves is possible for diameters from .472 inches (12mm) using the following procedure:

- Place the O-Ring into the groove.
- Compress the Turcon® seal into a kidney shape, avoid making sharp bends on the seal (Figure 10).
- Place the seal ring in compressed form into the groove and push against the O-Ring in the direction of the arrow in the groove by hand (Figure 11). For diameters smaller than 1.181 inches (30mm) an inserter tube is recommended (Figure 12).
- Finally, size the seal ring using a mandrel (Figure 13), which should have a chamfer of 10° to 15° over a minimum length of 2 x lead-in chamfer length Z_{min} see Table 4.

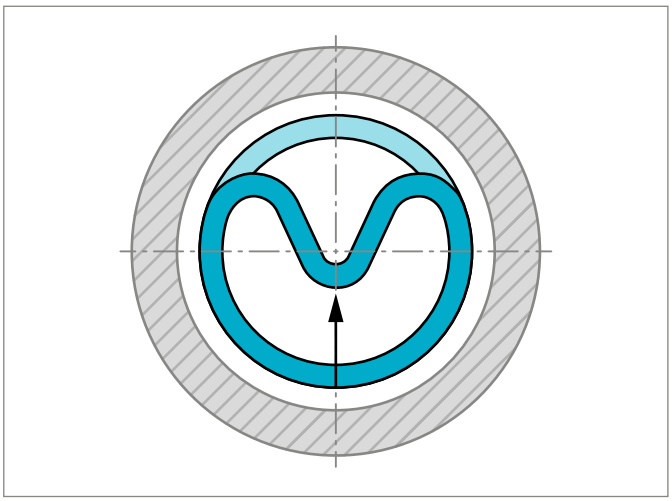

Figure 11: Inserting the seal ring into the closed groove

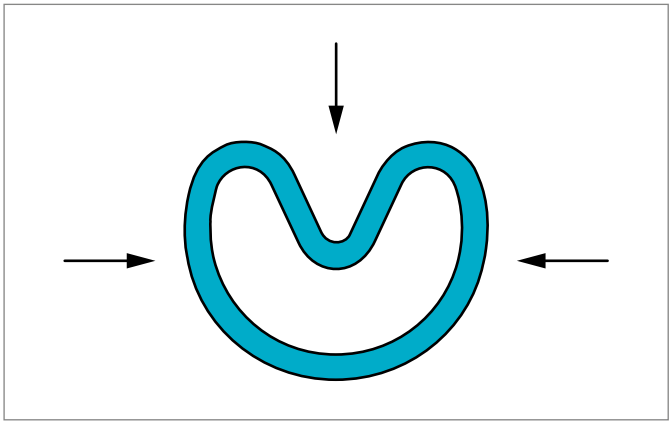

Figure 10: Kidney-shaped deformation

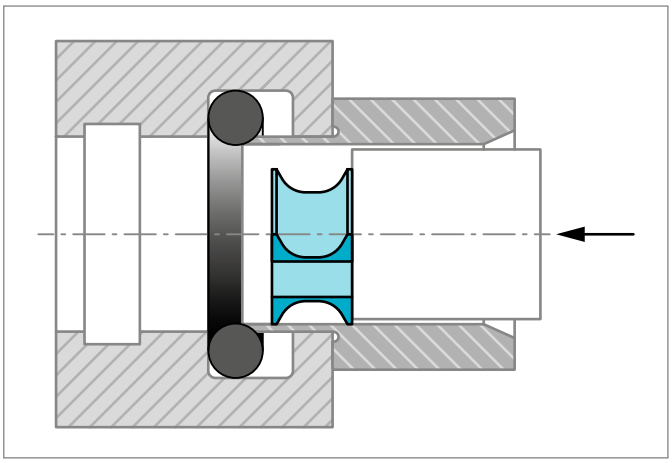

Figure 12: Insertion with an inserter tube

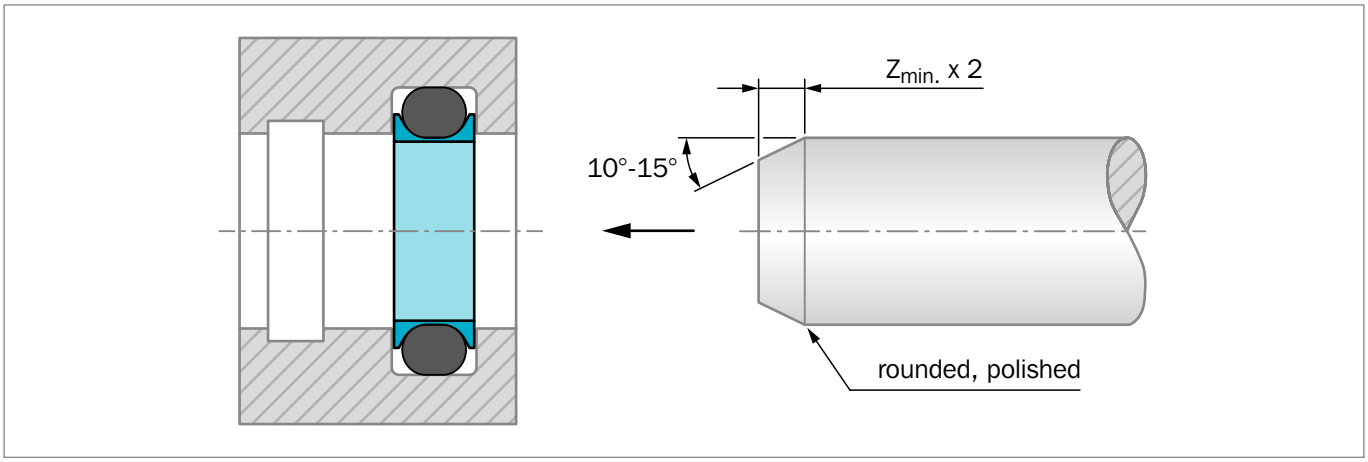

Figure 13: Calibration of the installed seal by means of a calibration mandrel

INSTALLATION OF SPRING ENERGIZED SEALS

Turcon® Variseal® M2 seals should preferably be installed in split grooves.

Installation in half-open grooves is possible with a snap fitting. Figure 14 shows the design of the groove.

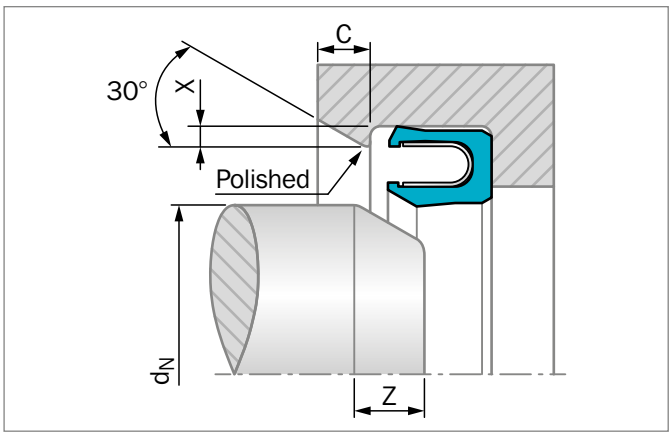

Figure 14: Installation in a half-open groove

Table 7: Installation in Half-Open Grooves

TSS Serial-No.	X min.	d_N min.	Length Z min.	C min.
RVAA	.015	.472	.157	.098
RVAB	.023	.787	.196	.137
RVAC	.027	1.181	.196	.137
RVAD	.031	1.574	.295	.177
RVAE	.035	2.165	.472	.295
RVAG	.059	2.755	.472	.295

Further details, see Figure 52 and Table 38.

In exceptional cases or with existing designs, an installation in closed grooves is also possible. The details in Table 8 should be regarded as guide values for installation.

Table 8: Installation in Closed Grooves

TSS Serial-No.	d_N min.
RVAA	1.181
RVAB	2.755
RVAC	4.330
RVAD	11.810
RVAE	19.684
RVAG	31.495

Quality Criteria

The cost-effective use of seals and bearings is highly influenced by the quality criteria applied in production. Seals and bearings from Trelleborg Sealing Solutions are continuously monitored according to strict quality standards from material acquisition to delivery.

Certification of our production plants in accordance with international standards QS 9000 / ISO 9000 meets the specific requirements for quality control and management of purchasing, production and marketing functions.

Our quality policy is consistently controlled by strict procedures and guidelines which are implemented within all strategic areas of the company.

All testing of materials and products is performed in accordance with accepted test standards and specifications, e.g. random sample testing in accordance with DIN ISO 2859, part 1.

Inspection specifications correspond to standards applicable to individual product groups or manufacturing locations (e.g. for O-Rings: ISO 3601).

The tenth digit of our part number defines the quality characteristics of the part. A hyphen indicates compliance with standard quality criteria outlined in this catalog. Customer specific requirements are indicated by a different symbol in this position. Customers who require special quality criteria should contact their local Trelleborg Sealing Solutions sales office for assistance. We have experience in meeting all customer quality requirements.

Storage information

Seals and bearings are often stored as spare parts for prolonged periods. Most rubbers change in physical properties during storage and ultimately become unserviceable due to excessive hardening, softening, cracking, crazing or other surface degradation. These changes may be the result of particular factors or combination of factors, such as deformation, oxygen, ozone, light, heat, humidity or oils and solvents.

With a few simple precautions, the shelf life of these products can be considerably lengthened.

Fundamental instructions on storage, cleaning and maintenance of elastomeric seal elements are described in international standards, such as:
DIN 7716 / BS 3F68: 1977, ISO 2230, or DIN 9088

The standards give several recommendations for the storage and the shelf life of elastomers, depending on the material classes.

The following recommendations are based on the several standards and are intended to provide the most suitable conditions for storage of rubbers. They should be observed to maintain the optimum physical and chemical values of the parts:

Heat
The storage temperature should preferable be between +41 °F and +77 °F (+5 °C and +25 °C). Direct contact with sources of heat such as boilers, radiators and direct sunlight should be avoided. If the storage temperature is below +59 °F (+15 °C), care should be taken to avoid distorting them during handling at that temperature as they may have stiffened. In this case the temperature of the articles should be raised to approximately +68 °F (+20 °C) before they are put into service.

Humidity
The relative humidity in the store room should be below 70%. Very moist or very dry conditions should be avoided. Condensation should not occur.

Light
Elastomeric seals should be protected from light sources, in particular direct sunlight or strong artificial light with an ultraviolet content. Individual storage bags offer the best protection as long as they are UV resistant.
It is advisable to cover any windows of storage rooms with a red or orange coating or screen.

Radiation
Precaution should be taken to protect stored articles from all sources of ionizing radiation likely to cause damage to stored articles.

Oxygen and ozone
Where possible, elastomeric materials should be protected from circulating air by wrapping, storage in airtight containers or by other suitable means.

As ozone is particularly deleterious to some elastomeric seals, storage rooms should not contain any equipment that is capable of generating ozone, such as mercury vapor lamps, high voltage electrical equipment, electric motors or other equipment which may give rise to electric sparks or silent electrical discharges. Combustion gases and organic vapor should be excluded from storage rooms as they may give rise to ozone via photochemical processes.

Deformation
Elastomeric materials should, wherever possible, be stored in a relaxed condition free from tension, compression or other deformation. Where articles are packed in a strain-free condition they should be stored in their original packaging.

Contact with liquid and semi-solid materials
Elastomeric seals should not be allowed to come into contact with solvents, oils, greases or any other semi-solid materials at any time during storage, unless so packed by the manufacturer.

Contact with metal and non-metals
Direct contact with certain metals, e.g. manganese, iron and particularly copper and its alloys, e.g. brass and compounds of these materials are known to have deleterious effects on some rubbers. Elastomeric seals should not be stored in contact with such metals.
Because of possible transfer of plasticizers or other ingredients, rubbers must not be stored in contact with PVC. Different rubbers should preferably be separated from each other.

Cleaning
Where necessary, cleaning should be carried out with the aid of soap and water or methylated spirits. Water should not, however, be permitted to come into contact with fabric-reinforced components, bonded seals (because of corrosion) or polyurethane rubbers. Disinfectants or other organic solvents, as well as sharp-edged objects, must not be used. The articles should be dried at room temperature and not placed near a source of heat.

Storage life and storage life control
The useful life of a elastomeric seals will depend to a large extent on the type of rubber. When stored under the recommended conditions (above sections) the below given storage life of several materials should be considered.

Material group	Initial storage period	Extension storage period
AU, EU, NR, SBR	5 years	2 years
ACM, AEM, CR, ECO, HNBR, IIR, NBR	7 years	3 years
CSM, EPDM, FKM, VMQ, FVMQ	10 years	5 years
FFKM e.g. Isolast®	20 years	5 years
Zurcon®	10 years	5 years
PTFE	unlimited	

Note 1: If the storage temperature is over or under 77 °F (25 °C) this will influence the storage time. Storage at 50 °F (10 °C) higher will reduce the storage time by about 50%. Storage at 50 °F (10 °C) lower will increase the storage time by around 100%.

Note 2: In application areas such as aerospace, the storage periods can differ from this specification. These specific storage conditions have to be agreed between the supplier and the buyer.

Elastomeric seals should be inspected after the given period. After this, giving an extension period is possible.

Rubber details and components less than 1.5mm (.059 inches) thick are liable to be more seriously affected by oxidation degradation even when stored in satisfactory conditions as recommended. Therefore they may be inspected and tested more frequently than mentioned above.

Rubber details / seals in assembled components
It is recommended that the units should be exercised at least every six months and that the maximum period a rubber detail be allowed to remain assembled within a stored unit, without inspection, be a total of the initial period stated above and the extension period. Naturally this will depend on the design of the unit concerned.

Single-Acting

O-Ring-Energized Turcon® Slipper Seal

Material:
Turcon® , Zurcon® and Elastomer

Turcon® Stepseal® 2K*

Description

Rod seals must exhibit no dynamic leakage to the atmosphere side under all operating conditions and must be statically completely leak tight when the machine is at a standstill. Furthermore, they should achieve a high degree of mechanical efficiency through low friction and be easy to install in small grooves. Costs and service life must meet the high expectations of the operator.

The rod seal Turcon® Stepseal® 2K comes closest to satisfying these ideal demands. Since the first Stepseal® was patented and introduced to the market in 1972, Trelleborg Sealing Solutions has maintained the series of technically outstanding seal elements through continuous innovative development of the design and of the Turcon® and Zurcon® materials. Turcon® Stepseal® 2K continues the tradition for improvement.

With the introduction of Stepseal® it was possible for the first time to arrange several seals, one behind the other, thus allowing statically and dynamically tight single-acting tandem seal configurations to be created, without any disturbing build-up of intermediate pressure.

The single-acting seal element is made of high-grade Turcon® or Zurcon® materials with outstanding sliding and wear resistance properties. It is installed according to ISO 7425/2 and Trelleborg Sealing Solutions standard grooves, using an O-Ring as the energizing element.

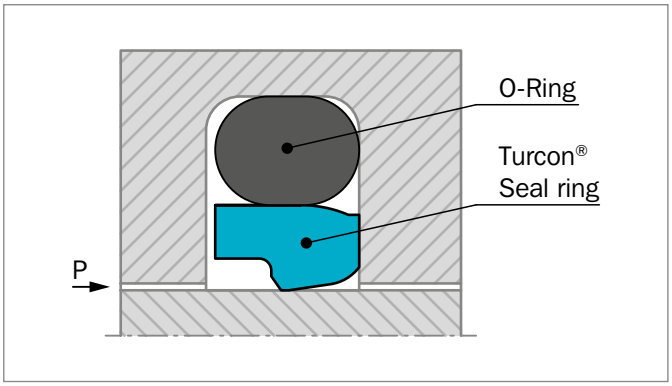

Figure 15: Turcon® Stepseal® 2K

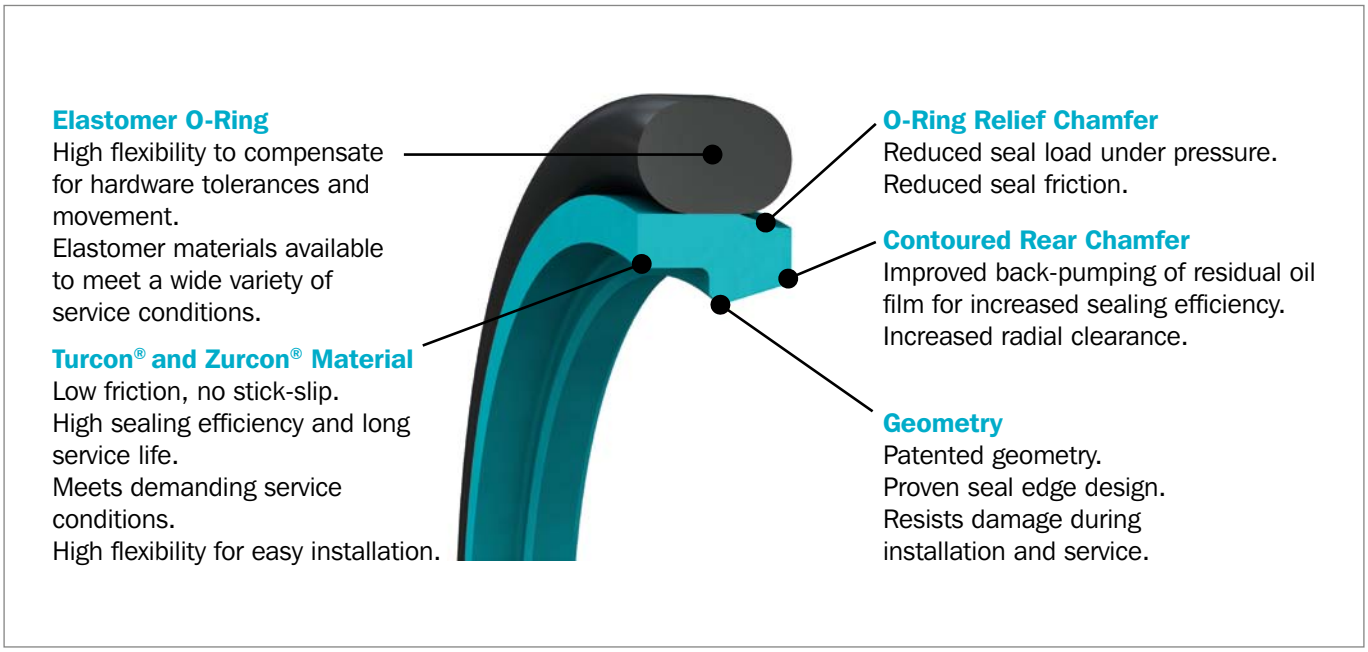

Figure 16: Turcon® Stepseal® 2K design features

* Patented geometry

METHOD OF OPERATION

The sealing performance of Stepseal® 2K (Figure 15) results from the hydrodynamic properties of the seal. The classic Stepseal® seal edge creates a steep contact pressure gradient on the high pressure side and a shallow contact pressure gradient on the low pressure side. The controlled pressure gradients minimizes fluid adherence to the piston rod during the extending stroke, and enables residual fluid film on the rod to be returned into the system on the return stroke. This is united with new patented design features which further improve the performance of Stepseal® 2K under severe service conditions.

The O-Ring relief chamfer reduces pressure loading on the seal, whereby contact with the rod is optimized and sealing performance is improved at high service pressures. The special high-lift rear chamfer combines a smooth downstream sealing face with the ability to meet large radial clearances and hardware tolerances.

Stepseal® 2K gives high static and dynamic sealing performance, and the build-up of intermediate pressure often found with tandem seal configurations (see Figure 19) is efficiently suppressed.

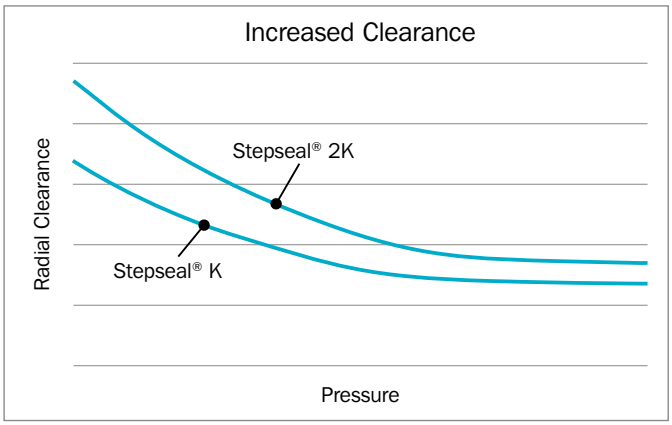

Figure 17: Turcon® Stepseal® 2K possesses superior extrusion resistance and allows increased hardware clearance

ADVANTAGES

- High static and dynamic sealing effect
- High extrusion resistance, meets high hardware clearances
- Low friction, high efficiency
- Stick-slip free starting, no sticking
- High abrasion resistance, high operational reliability
- Wide range of application temperatures and high resistance to chemicals, depending on the choice of O-Ring material
- Simple installation without seal edge deformation
- Available for all diameters up to 102 inches (2,600mm) rod diameter

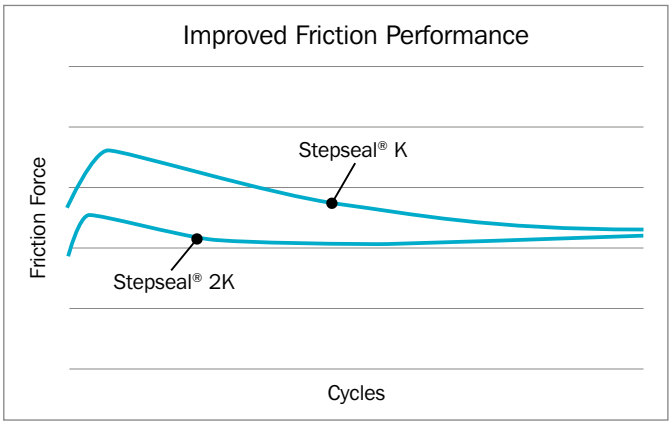

Figure 18: Turcon® Stepseal® 2K offers a uniform, low-friction characteristic

TECHNICAL DATA

Operating pressure:	Up to 8,700 psi (60 MPa)
Velocity:	Up to 50 ft/s (15 m/s) with reciprocating movements, frequency up to 5 Hz
Temperature:	-49 °F to +392 °F (-45 °C to +200 °C) (depending on O-Ring material)
Media:	Mineral oil-based hydraulic fluids, flame retardant hydraulic fluids, environmentally safe hydraulic fluids (bio-oils), water and others, depending on the O-Ring material (see Table 10)
Clearance:	The maximum permissible radial clearance S_{max} is shown in Table 11, as a function of the operating pressure and functional diameter.

IMPORTANT NOTE

The above data are maximum values and cannot be used at the same time. e.g. the maximum operating speed depends on material type, pressure, temperature and gap value. Temperature range also dependent on medium.

MATERIALS

The following material combination has proven effective for applications with hydraulic oils containing zinc:

Seal Ring:	Turcon® T46	
O-Ring	NBR, 70 Shore A	N
	FKM, 70 Shore A	V
	depending on the temperature	
Set Code:	T46N/T46V	

For specific applications, other material combinations as listed in Table 10, may also be used.

SERIES

Different cross section sizes are recommended as a function of the seal diameters. These are the criteria for these recommendations.

Table 11, shows the relationship between the series number according to the seal diameter range and the different application class sizes. These application classes are:

Standard application:	General applications in which no exceptional operating conditions exist
Light-duty application:	Applications with demands for reduced friction or for smaller grooves
Heavy-duty application:	For exceptional operating loads such as high pressures, pressure peaks, etc

Table 9: Available range

Series No.	Rod Diameter d_N f8/h9
RSF00	.080 - 5.125
RSF10	.250 - 10.000
RSF20	.375 - 17.500
RSF30	.500 - 25.500
RSF40	1.500 - 25.500
RSF50	7.750 - 40.000
RSF80	10.000 - 48.000
RSF60	25.500 - 99.999

For the Standard Recommendations Application range see Table 11.

APPLICATION EXAMPLES

- Mobile hydraulics
- Standard cylinders
- Machine tools
- Injection molding machines
- Presses
- Automotive industry
- Hydraulic hammers
- Servo hydraulics

REDUNDANT SEALING SYSTEM

In many applications, secondary seal systems are demanded. Figure 19 shows such a tandem configuration with the Stepseal® 2K.

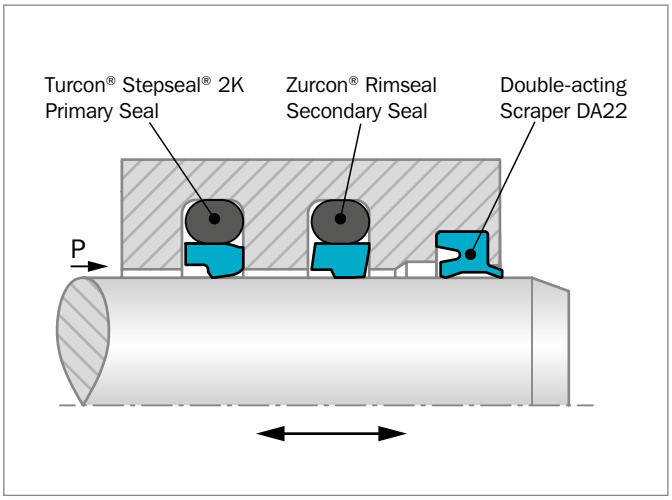

Figure 19: Turcon® Stepseal® 2K and Zurcon® Rimseal in tandem configuration

In this configuration it must be noted that a sufficiently large space is formed between the seals to take the hydraulic fluid, as shown in the figure.

Depending on the application and the operating conditions, the combination of different materials offers a further improvement in the sealing efficiency and the service life of the system, e.g. in hydraulic cylinders subject to high loads and under rough operating conditions, the primary seal should be made of Turcon® and the secondary seal of Zurcon® .

Stepseal® 2K elements should always be used in combination with a double-acting scraper to provide an optimum sealing effect.

The scrapers Turcon® Excluder® 2, Turcon® Excluder® 5, DA17, DA22 and DA24 are well suited to such applications. For further details, please refer to our "Scrapers" catalog.

Table 10: Turcon® and Zurcon® Materials for Stepseal® 2K

Material, Applications, Properties	Code	O–Ring Material Shore A	Code	O-Ring Operating Temp.* °F	Mating Surface Material	PSI Max.
Turcon® M12 First material choice for seals in linear motion Overall improved properties For new constructions and updating For all commonly applied hydraulic fluids including fluids with low lubrication performance Lowest friction and best sliding properties Lowest wear on seals Improved absorption of abrassive contaminants Low wear or abrasion of counter surface BAM tested Mineral fiber and additives filled Color: Dark gray	M12	NBR-70	N	-22 to +212	Steel Steel hardened Steel chrome plated (rod) Steel plated (rod) Cast iron Stainless steel Titanium	7,250
		NBR-70 Low temp.	T	-49 to +176		
		FKM-70	V	+14 to +392		
Turcon® T46 Standard material for hydraulics, high compressive strength, good sliding and wear properties, good extrusion resistance BAM tested Bronze filled Color: Grayish to dark brown	T46	NBR-70	N	-22 to +212	Steel hardened Steel chrome plated Cast iron	7,250
		NBR-70 Low temp.	T	-49 to +176		
		FKM-70	V	+14 to +392		
Turcon® T08 Very high compressive strength, very good extrusion resistance High bronze filled Color: Light to dark brown	T08	NBR-70	N	-22 to +212	Steel hardened Steel chrome plated Cast iron	8,700
		NBR-70 Low temp.	T	-49 to +176		
		FKM-70	V	+14 to +392		
Turcon® T40 For all lubricating and non-lubricating hydraulic fluids, hydraulic oils without zinc, water hydraulic, soft mating surfaces Surface texture not suitable for gases Carbon fiber filled Color: Gray	T40	NBR-70	N	-22 to +212	Steel Steel chrome plated Cast iron Stainless steel Aluminum Bronze Alloys	3,625
		NBR-70 Low temp.	T	-49 to +176		
		FKM-70	V	+14 to +392		
		EPDM-70	E**	-49 to +293		

Table continues on next page

Material, Applications, Properties	Code	O–Ring Material Shore A	Code	O-Ring Operating Temp.* °F	Mating Surface Material	PSI Max.
Turcon® T29 For all lubricating and non-lubricating hydraulic fluids, hydraulic oils without zinc, soft mating surfaces, good extrusion resistance Surface texture not suitable for gases High carbon fiber filled Color: Gray	T29	NBR-70	N	-22 to +212	Steel Steel chrome plated Cast iron Stainless steel Aluminium Bronze	4,350
		NBR-70 Low temp.	T	-49 to +176		
		FKM-70	V	+14 to +392		
		EPDM-70	E**	-49 to +293		
Turcon® T05 For all lubricating hydraulic fluids, hard mating surfaces, very good slide properties, low friction. Color: Turquoise	T05	NBR-70	N	-22 to +212	Steel hardened Steel chrome plated	2,900
		NBR-70 Low temp.	T	-49 to +176		
		FKM-70	V	+14 to +392		
Turcon® T42 For all lubricating and non-lubricating hydraulic fluids, good chemical resistance, good dielectric properties Glass fiber filled + MoS_2 Color: Gray to blue	T42	NBR-70	N	-22 to +212	Steel hardened Steel chrome plated Cast iron	5,800
		NBR-70 Low temp.	T	-49 to +176		
		FKM-70	V	+14 to +392		
Turcon® T19 For all lubricating fluids and hydraulic oils without zinc, high sealing efficiency, good sliding and wear properties, mild to counter surface Mineral fiber filled Color: Dark green-gray	T19	NBR-70	N	-22 to +212	Steel Steel hardened Steel chrome plated Cast iron Stainless steel	5,000
		NBR-70 Low temp.	T	-49 to +176		
		FKM-70	V	+14 to +392		
Zurcon® Z53*** For lubricating hydraulic fluids, high abrasion resistance, high extrusion resistance, limited chemical resistance Color: Yellow to light-brown	Z53	NBR-70	N	-22 to +212	Steel Steel chrome plated Cast iron Ceramic coating Stainless steel	8,700
		NBR-70 Low temp.	T	-49 to +176		
Zurcon® Z80 For lubricating and non-lubricating hydraulic fluids, high abrasion resistance, very good chemical resistance, limited temp. resistance Ultra high molecular weight polyethylene Color: White to off-white	Z80	NBR-70	N	-22 to +176	Steel Steel chrome plated Stainless steel Aluminum Bronze Ceramic coating	5,075
		NBR-70 Low temp.	T	-49 to +176		

* The O-Ring operation temperature is only valid in mineral hydraulic oil.

** Material not suitable for mineral oils.

*** max. Ø 102 inches (2,600mm).

BAM: Tested by "Bundesanstalt Materialprüfung, Germany".

Highlighted materials are standard.

Installation Recommendation (Inch Rod Series)

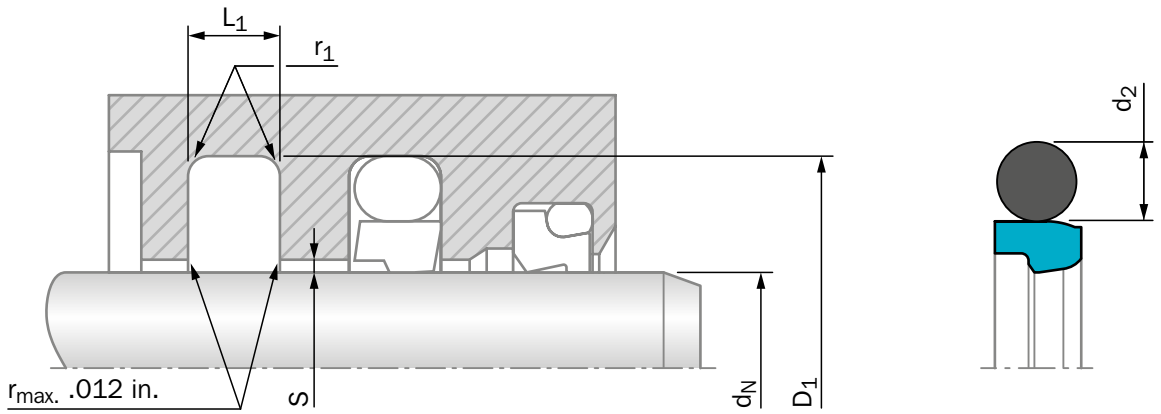

Figure 20: Installation drawing

Table 11: Installation recommendation

TSS Series No.	Rod Diameter d_N f8/h9			Groove Diameter	Groove Width	Radius	Radial Clearance S_{max}*			O-Ring Cross Section
	Standard Application	Light Application**	Heavy Duty Application	D_1 H9	L_1 +.008	$r_{1\ max}$	10 MPa 1500 psi	20 MPa 3000 psi	40 MPa 5800 psi	d_2
RSF0	.125 - .312	.313 - .749	-	d_N +.193	.087	.016	.012	.008	.006	.070
RSF1	.313 - .749	.750 - 1.499	-	d_N +.287	.126	.024	.016	.010	.006	.103
RSF2	.750 - 1.499	1.500 - 7.874	.313 - .749	d_N +.421	.165	.039	.020	.012	.008	.139
RSF3	1.500 - 7.874	7.875 - 9.999	.750 - 1.499	d_N +.594	.248	.051	.028	.016	.010	.210
RSF4	7.875 - 9.999	10.000 - 25.499	1.500 - 7.874	d_N +.807	.319	.071	.031	.024	.014	.275
RSF5	10.000 - 25.499	25.500 - 39.999	7.875 - 9.999	d_N +.945	.319	.071	.039	.031	.020	.275
RSF8	25.500 - 39.999	≥40.000	10.000 - 25.499	d_N +1.075	.374	.098	.035	.028	.016	.331
RSF6	≥40.000	-	25.500 - 39.999	d_N +1.496	.543	.118	.047	.035	.024	.472

* At pressures >**40 Mpa (5,800 psi)**: use diameter tolerance H8/f8 (bore / rod) in the area behind the seal; or consult Trelleborg Sealing Solutions for alternative material or profiles.
** For easier installation in closed grooves with small rod diameters (<1.575 inches (40mm)).

ORDERING EXAMPLE

Turcon® Stepseal® 2K complete with O-Ring, standard application, RSF4 (from Table 11).

Rod diameter:	d_N = 8.000 inches
TSS Part No.:	RSF408000 from Table 12

Select the material from Table 10. The corresponding code numbers are appended to the TSS Part No. (from Table 12). Together these form the TSS Article No.
The TSS Article No. for all intermediate sizes not shown in Table 12 can be determined following the example below.

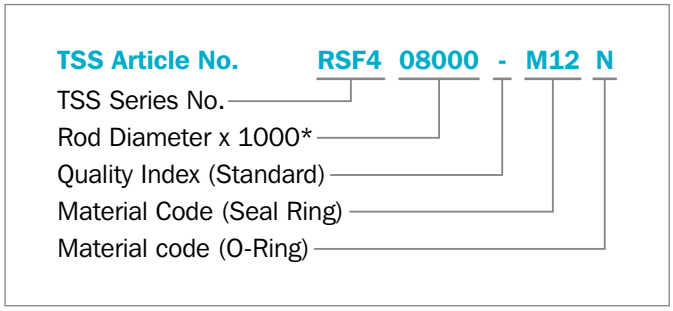

* For diameters ≥102 inches please consult your Trelleborg Sealing Solutions sales office for special TSS Article No.

NOTES:

1) Tolerances used are per ISO-286; ISO System of Limits and Fits. The tolerances are converted from metric and rounded to the nearest three place decimal.
2) The clearances stated as S in the above table are for when the seal is specified with Slydring® bearings. When not incorporating Slydring® bearings, the diametral clearance should be reduced.
3) Consult your sales office for diameters that exceed those listed in the above table.

Turned - other diameters also available, no tool costs.

Table 12: Installation dimensions / TSS Part No.

Rod Diameter	Groove Diameter	Groove Width	TSS Part No.
d_N f8/h9	D_1 H9	L_1 +.008	
.125	.318	.087	RSF000125
.188	.381	.087	RSF000188
.250	.443	.087	RSF000250
.313	.506	.087	RSF000313
.313	.600	.126	RSF100313
.375	.568	.087	RSF000375
.375	.662	.126	RSF100375
.438	.631	.087	RSF000438
.438	.725	.126	RSF100438
.500	.693	.087	RSF000500
.500	**.787**	**.126**	**RSF100500**
.563	.756	.087	RSF000563
.563	.850	.126	RSF100563
.625	.818	.087	RSF000625
.625	.912	.126	RSF100625
.688	.881	.087	RSF000688
.688	.975	.126	RSF100688
.750	.943	.087	RSF000750

Rod Diameter	Groove Diameter	Groove Width	TSS Part No.
d_N f8/h9	D_1 H9	L_1 +.008	
.750	1.037	.126	RSF100750
.750	**1.171**	**.165**	**RSF200750**
.813	1.100	.126	RSF100813
.813	1.234	.165	RSF200813
.875	1.162	.126	RSF100875
.875	**1.296**	**.165**	**RSF200875**
.938	1.225	.126	RSF100938
.938	1.359	.165	RSF200938
1.000	1.287	.126	RSF101000
1.000	**1.421**	**.165**	**RSF201000**
1.063	1.350	.126	RSF101063
1.063	1.484	.165	RSF201063
1.125	1.412	.126	RSF101125
1.125	**1.546**	**.165**	**RSF201125**
1.188	1.475	.126	RSF101188
1.188	1.609	.165	RSF201188
1.250	1.537	.126	RSF101250
1.250	**1.671**	**.165**	**RSF201250**

Rod Diameter	Groove Diameter	Groove Width	TSS Part No.
d_N f8/h9	D_1 H9	L_1 +.008	
1.313	1.600	.126	RSF101313
1.313	1.734	.165	RSF201313
1.375	1.662	.126	RSF101375
1.375	**1.796**	**.165**	**RSF201375**
1.438	1.725	.126	RSF101438
1.438	1.859	.165	RSF201438
1.500	1.787	.126	RSF101500
1.500	1.921	.165	RSF201500
1.500	**2.094**	**.248**	**RSF301500**
1.563	1.984	.165	RSF201563
1.563	2.157	.248	RSF301563
1.625	2.046	.165	RSF201625
1.625	**2.219**	**.248**	**RSF301625**
1.688	2.109	.165	RSF201688
1.688	2.282	.248	RSF301688
1.750	2.171	.165	RSF201750
1.750	**2.344**	**.248**	**RSF301750**
1.813	2.234	.165	RSF201813
1.813	2.407	.248	RSF301813
1.875	2.296	.165	RSF201875
1.875	**2.469**	**.248**	**RSF301875**
1.938	2.359	.165	RSF201938
1.938	2.532	.248	RSF301938
2.000	2.421	.165	RSF202000
2.000	**2.594**	**.248**	**RSF302000**
2.125	2.546	.165	RSF202125
2.125	2.719	.248	RSF302125
2.250	2.671	.165	RSF202250
2.250	**2.844**	**.248**	**RSF302250**
2.375	2.796	.165	RSF202375
2.375	2.969	.248	RSF302375
2.500	2.921	.165	RSF202500
2.500	**3.094**	**.248**	**RSF302500**
2.625	3.046	.165	RSF202625
2.625	3.219	.248	RSF302625
2.750	3.171	.165	RSF202750
2.750	**3.344**	**.248**	**RSF302750**
2.875	3.296	.165	RSF202875
2.875	3.469	.248	RSF302875
3.000	3.421	.165	RSF203000
3.000	**3.594**	**.248**	**RSF303000**
3.125	3.546	.165	RSF203125

Rod Diameter	Groove Diameter	Groove Width	TSS Part No.
d_N f8/h9	D_1 H9	L_1 +.008	
3.125	3.719	.248	RSF303125
3.250	3.671	.165	RSF203250
3.250	**3.844**	**.248**	**RSF303250**
3.375	3.796	.165	RSF203375
3.375	3.969	.248	RSF303375
3.500	3.921	.165	RSF203500
3.500	**4.094**	**.248**	**RSF303500**
3.625	4.046	.165	RSF203625
3.625	4.219	.248	RSF303625
3.750	4.171	.165	RSF203750
3.750	**4.344**	**.248**	**RSF303750**
3.875	4.296	.165	RSF203875
3.875	4.469	.248	RSF303875
4.000	4.421	.165	RSF204000
4.000	**4.594**	**.248**	**RSF304000**
4.125	4.546	.165	RSF204125
4.125	4.719	.248	RSF304125
4.250	4.671	.165	RSF204250
4.250	**4.844**	**.248**	**RSF304250**
4.375	4.796	.165	RSF204375
4.375	4.969	.248	RSF304375
4.500	4.921	.165	RSF204500
4.500	**5.094**	**.248**	**RSF304500**
4.625	5.219	.248	RSF304625
4.625	5.432	.319	RSF404625
4.750	**5.344**	**.248**	**RSF304750**
4.750	5.557	.319	RSF404750
4.875	5.469	.248	RSF304875
4.875	5.682	.319	RSF404875
5.000	**5.594**	**.248**	**RSF305000**
5.000	5.807	.319	RSF405000
5.125	5.719	.248	RSF305125
5.125	5.932	.319	RSF405125
5.250	**5.844**	**.248**	**RSF305250**
5.250	6.057	.319	RSF405250
5.375	5.969	.248	RSF305375
5.375	6.182	.319	RSF405375
5.500	**6.094**	**.248**	**RSF305500**
5.500	6.307	.319	RSF405500
5.625	6.219	.248	RSF305625
5.625	6.432	.319	RSF405625
5.750	**6.344**	**.248**	**RSF305750**

Rod Diameter	Groove Diameter	Groove Width	TSS Part No.
d_N f8/h9	D_1 H9	L_1 +.008	
5.750	6.557	.319	RSF405750
6.000	**6.594**	**.248**	**RSF306000**
6.000	6.807	.319	RSF406000
6.250	6.844	.248	RSF306250
6.250	7.057	.319	RSF406250
6.500	**7.094**	**.248**	**RSF306500**
6.500	7.307	.319	RSF406500
6.750	7.344	.248	RSF306750
6.750	7.557	.319	RSF406750
7.000	**7.594**	**.248**	**RSF307000**
7.000	7.807	.319	RSF407000
7.250	7.844	.248	RSF307250
7.250	8.057	.319	RSF407250
7.500	**8.094**	**.248**	**RSF307500**
7.500	8.307	.319	RSF407500
7.750	8.344	.248	RSF307750
7.750	8.557	.319	RSF407750
8.000	**8.807**	**.319**	**RSF408000**
8.250	9.057	.319	RSF408250
8.500	9.307	.319	RSF408500
8.750	9.557	.319	RSF408750
9.000	**9.807**	**.319**	**RSF409000**
9.250	10.057	.319	RSF409250
9.500	10.307	.319	RSF409500
9.750	10.557	.319	RSF409750
10.000	10.807	.319	RSF410000
10.000	**10.945**	**.319**	**RSF510000**
10.500	11.307	.319	RSF410500
10.500	11.445	.319	RSF510500
11.000	11.807	.319	RSF411000
11.000	**11.945**	**.319**	**RSF511000**
11.500	12.307	.319	RSF411500
11.500	12.445	.319	RSF511500
12.000	**12.945**	**.319**	**RSF512000**
12.500	13.445	.319	RSF512500
13.000	13.945	.319	RSF513000
13.500	14.445	.319	RSF513500
14.000	**14.945**	**.319**	**RSF514000**
14.500	15.445	.319	RSF514500
15.000	15.945	.319	RSF515000
15.500	16.445	.319	RSF515500
16.000	**16.945**	**.319**	**RSF516000**

Rod Diameter	Groove Diameter	Groove Width	TSS Part No.
d_N f8/h9	D_1 H9	L_1 +.008	
16.500	17.445	.319	RSF516500
17.000	17.945	.319	RSF517000
17.500	18.445	.319	RSF517500
18.000	**18.945**	**.319**	**RSF518000**
18.500	19.445	.319	RSF518500
19.000	19.945	.319	RSF519000
19.500	20.445	.319	RSF519500
20.000	**20.945**	**.319**	**RSF520000**

The sizes listed in **bold** font are preferred sizes (more likely to be available for immediate shipment).

Single-Acting

O-Ring-Energized Turcon® Slipper Seal

Material:
Turcon®, Zurcon® and Elastomer

■ Turcon® Stepseal® V*

Description

Stepseal® V is based on the dynamic, unidirectional Turcon® Stepseal® sealing concept. During the extending stroke of the rod, the contact force on the sealing edge creates high local sealing pressure and limits micro fluid-film formation under the seal. When the rod is retracted, the Stepseal® sealing face supports hydrodynamic back-pumping of the fluid film, and ensures leak-free sealing efficiency with low friction and long service life.

In long-stroke cylinders and equipment operating with low speed during retraction, it has been found that hydrodynamic back-pumping may become insufficient to prevent build-up of pressure behind the primary seal. Pressure build-up in the seal system leads to leakage, increased friction and wear, and may ultimately lead to seal replacement. The usual precaution has been to provide space for a buffer volume behind the primary seal, or to install a drain line.

An innovation from Trelleborg Sealing Solutions, the built-in check valve function of the Stepseal® V eliminates pressure build-up and removes the need for buffer volumes and drain lines. The Stepseal® V is available in high-grade Turcon® or Zurcon® materials with outstanding sliding and wear resistance properties. It is installed in Trelleborg Sealing Solutions standard grooves and according to ISO 7425, using an O-Ring as an energizing element.

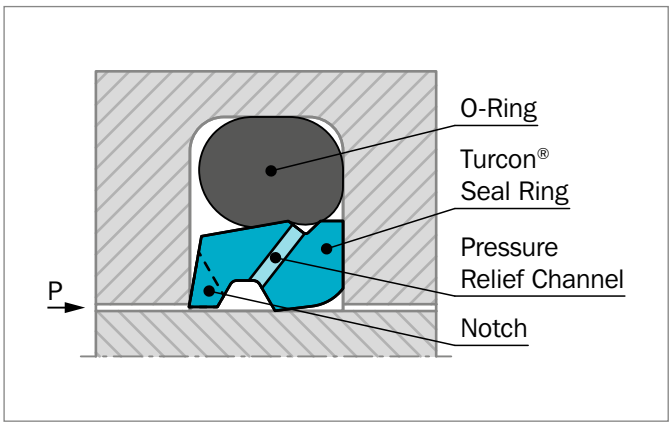

Figure 21: Turcon® Stepseal® V with tight axial groove fit

ADVANTAGES

- Same advanced functions as Stepseal® 2K
- No system pressure on secondary sealing element and/or Scraper/Excluder®
- Check valve function of O-Ring eliminates risk of fluid bypassing the seal during pressure loading when pressurized
- Not restricted by speed in relation to counter surface, stroke length or deflection
- Minimum contribution of friction to secondary sealing element and/or Scraper/Excluder®
- Minimum wear of secondary sealing element and/or Scraper/Excluder®
- Increased leakage control
- Prolonged seal life
- Increased operational reliability
- Fits standard Stepseal® 2K groove dimensions as well as ISO 7425 seal housings

APPLICATION EXAMPLES

- Mobile hydraulics
- Construction equipment
- Crane boom cylinders
- Presses
- Injection molding machines
- Used in cylinders for:
  - Clamps
  - Wind-power
  - Long stroke
  - Hydropower
  - Watergates
  - Tensioners
- Theater hydraulics

* Patented geometry

CHARACTERISTICS

- Primary seal with hydrostatic ventilation
- Check valve function
- Hydrodynamic back-pumping
- Stabilized position in the groove
- Fits existing Turcon® Stepseal® 2K groove
- Available for ISO 7425/2 seal housing
- Prolonged seal life
- Increased leakage control
- Low-friction operation over whole life of product
- Prevents undefined pressurization of secondary sealing element

FEATURES

Stepseal® V is developed to meet continuously increasing demands on sealing systems. Under extreme performance requirements, Stepseal® V offers improved leakage control, extended service life and increased reliability.

In dynamic applications, Stepseal® V provides efficient, reliable sealing performance even under the most demanding service conditions. The high seal efficiency and refined valve function of Stepseal® V eliminates seal system pressure build-up between its tandem rod seal configuration, eliminating buffer volume between the seals.

In rod seal systems, Stepseal® V is preferably used with a secondary Turcon® or Zurcon® rod seal, or with a double-acting Excluder® or Scraper.

As a piston seal, Stepseal® V is used with a double-acting Turcon® piston seal.

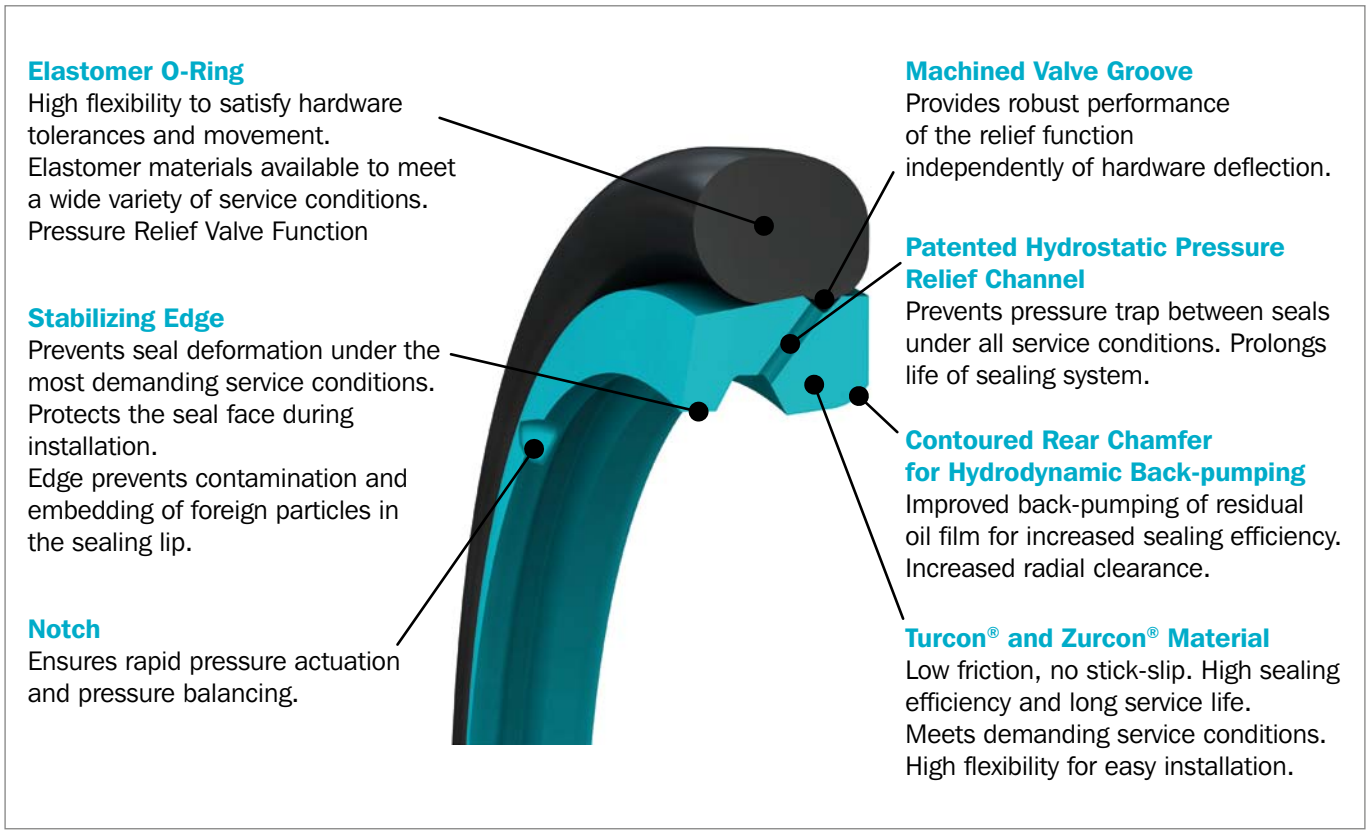

Figure 22: Turcon® Stepseal® V design features

TECHNICAL DATA

Pressure:	Up to 7,250 psi (50 MPa) (Turcon® M12)
Velocity:	Up to 50 ft/s (15 m/s) with linear movements, frequency up to 15 Hz.
Temperature:	-49° F to +392° F (-45° C to +200° C) (depending on seal and O-Ring material)
Media:	Mineral oil based hydraulic fluids, flame retardant hydraulic fluids, environmentally friendly hydraulic fluids (bio-oils), phosphate ester, water and others, depending on the seal and O-Ring material - see Table 13.
Clearance:	The maximum permissible radial clearance S_{max} is shown in Table 14, as a function of the operating pressure and functional diameter.

IMPORTANT NOTE

The above data are maximum values and cannot be used at the same time, e.g. the maximum operating speed depends on material type, pressure, temperature and gap value.

*IMPORTANT NOTE FOR PISTON VERSION:

In the case of unpressurized applications in temperatures below 32 °F please contact our local Trelleborg Sealing Solutions marketing company for more information!

Table 13: Turcon® and Zurcon® Materials for Stepseal® V

Material, Applications, Properties	Code	O–Ring Material Shore A	Code	O-Ring Operating Temp.* °F	Mating Surface Material	PSI max. Dynamic
Turcon® M12 First material choice for seals in linear motion Overall improved properties For new and updated applications For all commonly used hydraulic fluids including fluids with low lubrication performance Lowest friction and best sliding properties Lowest wear on seals Improved absorption of abrasive contaminants Low wear or abrasion of counter surface Mineral fiber and additives fillers Color: Dark gray	M12	NBR-70	N	-22 to +212	Steel Steel hardened Steel chrome plated (rod) Steel plated (rod) Cast iron Stainless steel Titanium	7,250
		NBR-70 Low temp.	T	-49 to +176		
		FKM-70	V	+14 to +392		
Turcon® T05 For lubricating fluids Ideal for gas service Very low friction Very good sliding and sealing properties Color: Turquoise	T05	NBR-70	N	-22 to +212	Steel Steel hardened Steel chrome plated (rod)	2,900
		NBR-70 Low temp.	T	-49 to +176		
		FKM-70	V	+14 to +392		
Turcon® T08 For lubricating fluids and linear motion Very high compressive strength and extrusion resistance Hard counter surfaces are recommended Bronze filled Color: Light to dark brown, which may have variations in shading	T08	NBR-70	N	-22 to +212	Steel hardened Steel chrome plated (rod) Cast iron	8,700
		NBR-70 Low temp.	T	-49 to +176		
		FKM-70	V	+14 to +392		
Turcon® T10 For hydraulic and pneumatic applications For lubricating and non-lubricating fluids High extrusion resistance Good chemical resistance Not for electrically conducting fluids BAM tested Carbon, graphite filled Color: Black	T10	NBR-70	N	-22 to +212	Steel Steel hardened Steel chrome plated (rod) Stainless steel	5,800
		NBR-70 Low temp.	T	-49 to +176		
		FKM-70	V	+14 to +392		
		EPDM-70	E**	-49 to +176		
Turcon® T29 For lubricating and non-lubricating fluids Good extrusion resistance Surface texture is not suitable for gas sealing Not for electrically conducting fluids Carbon fiber filled Color: Gray	T29	NBR-70	N	-22 to +212	Steel Steel hardened Steel chrome plated (rod) Cast iron Stainless steel	4,350
		NBR-70 Low temp.	T	-49 to +176		
		FKM-70	V	+14 to +392		
		EPDM-70	E**	-49 to +176		

Table continues on next page

Material, Applications, Properties	Code	O–Ring Material Shore A	Code	O-Ring Operating Temp.* °F	Mating Surface Material	PSI max. Dyna-mic
Turcon® T40 For lubricating and non-lubricating fluids High frequency and short strokes Water hydraulics Surface texture is not suitable for gas sealing Carbon fiber filled Color: Gray	T40	NBR-70	N	-22 to +212	Steel Steel hardened Steel chrome plated (rod) Cast iron Stainless steel Aluminum	3,625
		NBR-70 Low temp.	T	-49 to +176		
		FKM-70	V	+14 to +392		
		EPDM-70	E**	-49 to +176		
Turcon® T46 For lubricated hydraulics in linear motion High compressive strength High extrusion resistance Very good sliding and wear properties BAM tested Bronze filled Color: Light to dark brown, which may have variations in shading	T46	NBR-70	N	-22 to +212	Steel hardened Steel chrome plated (rod) Cast iron	7,250
		NBR-70 Low temp.	T	-49 to +176		
		FKM-70	V	+14 to +392		
Zurcon® Z53*** For mineral oil based fluids Very high abrasion and extrusion resistance For counter surface with rougher surface finish Limited chemical resistance Max. working temperature +230 °F Color: Yellow to light-brown	Z53	NBR-70	N	-22 to +212	Steel Steel hardened Steel chrome plated (rod) Cast iron Stainless steel Ceramic coating	8,700
		NBR-70 Low temp.	T	-49 to +176		
Zurcon® Z80 For lubricating and non-lubricating fluids Water based fluids, air and gases Dry air pneumatics High abrasion and extrusion resistance For service in abrasive conditions and media with particles Good chemical resistance Limited temperature capability (-76 to +176 °F) UHMWPE (Ultra High Molecular Weight Polyethylene) Color: White to off-white	Z80	NBR-70	N	-22 to +212	Steel Steel hardened Steel chrome plated (rod) Stainless steel Aluminum Ceramic coating	5,075
		NBR-70 Low temp.	T	-49 to +176		
		EPDM-70	E**	-49 to +176		

* The O-Ring operation temperature is only valid in mineral hydraulic oil (except EPDM).

** Material not suitable for mineral oils.

*** Max. Ø 86 inches (2,200mm).

BAM: Tested by "Bundesanstalt Materialprüfung, Germany".

Highlighted materials are recommended.

Installation Recommendation (Inch Rod Series)

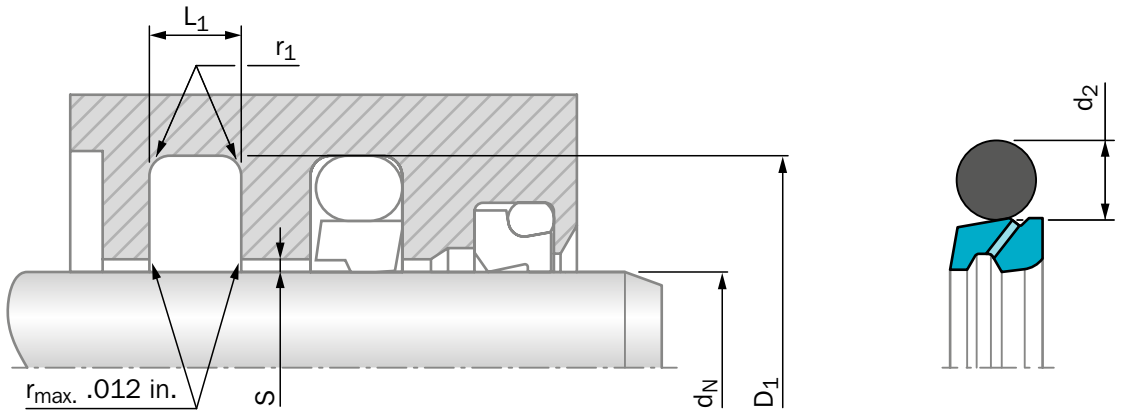

Figure 23: Installation drawing

Table 14: Installation recommendation

TSS Series No.	Rod Diameter d_N f8/h9			Groove Diameter	Groove Width	Radius	Radial Clearance S_{max}*			O-Ring Cross-Section
	Standard Application	Light Application	Heavy Duty Application	D_1 H9	L_1 +0.2	$r_{1\,max}$	10 MPa 1500 psi	20 MPa 3000 psi	40 MPa 5800 psi	d_2
RSVA	.125 - .312	.313 - .749	-	d_N +.193	.087	.016	.012	.008	.006	.070
RSVB	.313 - .749	.750 - 1.499	-	d_N +.287	.126	.024	.016	.010	.006	.103
RSVC	.750 - 1.499	1.500 - 7.874	.313 - .749	d_N +.421	.165	.039	.020	.012	.008	.139
RSVD	1.500 - 7.874	7.875 - 9.999	.750 - 1.499	d_N +.594	.248	.051	.028	.016	.010	.210
RSVE	7.875 - 9.999	10.000 - 25.499	1.500 - 7.874	d_N +.807	.319	.071	.031	.024	.014	.275
RSVF	10.000 - 25.499	-	7.875 - 9.999	d_N +.945	.319	.071	.039	.031	.020	.275

* At pressures >**40 MPa (5,800 psi)** use diameter tolerance H8/f8 (bore/rod) in the area behind seal or consult Trelleborg Sealing Solutions for alternative material or profiles.
Slydring® / Wear Rings are not applicable at very small radial clearances (S); please consult the Slydring® catalog.

ORDERING EXAMPLE

Turcon® Stepseal® V complete with O-Ring, standard application:

Series:	RSVC from Table 14
Rod diameter:	d_N = 1.000 inch
TSS Part No.:	RSVC01000 from Table 15

Select the material from Table 13. The corresponding code numbers are appended to the Part No. Together these form the TSS Article Number. The Article Number for all intermediate sizes not shown in Table 15 can be determined following the example opposite.

TSS Article No. RSVC 0 1000 - M12 N

- Series No. — RSVC
- Type (Standard) — 0
- Rod Diameter x 1000 — 1000
- Quality Index (Standard) — -
- Material Code (Seal Ring) — M12
- Material Code (O-Ring) — N

NOTE:

Turned - other diameters also available, no tool costs.

Table 15: Installation dimensions / Part No.

Rod Diameter	Groove Diameter	Groove Width	TSS Part No.
d_N f8/h9	D_1 H9	L_1 +.008	
.750	.943	.087	RSVA00750
.750	1.037	.126	RSVB00750
.750	1.171	.165	RSVC00750
.813	1.100	.126	RSVB00813
.813	1.234	.165	RSVC00813
.875	1.162	.126	RSVB00875
.875	1.296	.165	RSVC00875
.938	1.225	.126	RSVB00938
.938	1.359	.165	RSVC00938
1.000	1.287	.126	RSVB01000
1.000	1.421	.165	RSVC01000
1.063	1.350	.126	RSVB01063
1.063	1.484	.165	RSVC01063
1.125	1.412	.126	RSVB01125
1.125	1.546	.165	RSVC01125
1.188	1.475	.126	RSVB01188
1.188	1.609	.165	RSVC01188
1.250	1.537	.126	RSVB01250
1.250	1.671	.165	RSVC01250
1.313	1.600	.126	RSVB01313
1.313	1.734	.165	RSVC01313
1.375	1.662	.126	RSVB01375
1.375	1.796	.165	RSVC01375
1.438	1.725	.126	RSVB01438
1.438	1.859	.165	RSVC01438
1.500	1.787	.126	RSVB01500
1.500	1.921	.165	RSVC01500
1.500	2.094	.248	RSVD01500
1.563	1.984	.165	RSVC01563
1.563	2.157	.248	RSVD01563
1.625	2.046	.165	RSVC01625
1.625	2.219	.248	RSVD01625
1.688	2.109	.165	RSVC01688
1.688	2.282	.248	RSVD01688
1.750	2.171	.165	RSVC01750
1.750	2.344	.248	RSVD01750
1.813	2.234	.165	RSVC01813
1.813	2.407	.248	RSVD01813
1.875	2.296	.165	RSVC01875
1.875	2.469	.248	RSVD01875
1.938	2.359	.165	RSVC01938

Rod Diameter	Groove Diameter	Groove Width	TSS Part No.
d_N f8/h9	D_1 H9	L_1 +.008	
1.938	2.532	.248	RSVD01938
2.000	2.421	.165	RSVC02000
2.000	2.594	.248	RSVD02000
2.125	2.546	.165	RSVC02125
2.125	2.719	.248	RSVD02125
2.250	2.671	.165	RSVC02250
2.250	2.844	.248	RSVD02250
2.375	2.796	.165	RSVC02375
2.375	2.969	.248	RSVD02375
2.500	2.921	.165	RSVC02500
2.500	3.094	.248	RSVD02500
2.625	3.046	.165	RSVC02625
2.625	3.219	.248	RSVD02625
2.750	3.171	.165	RSVC02750
2.750	3.344	.248	RSVD02750
2.875	3.296	.165	RSVC02875
2.875	3.469	.248	RSVD02875
3.000	3.421	.165	RSVC03000
3.000	3.594	.248	RSVD03000
3.125	3.546	.165	RSVC03125
3.125	3.719	.248	RSVD03125
3.250	3.671	.165	RSVC03250
3.250	3.844	.248	RSVD03250
3.375	3.796	.165	RSVC03375
3.375	3.969	.248	RSVD03375
3.500	3.921	.165	RSVC03500
3.500	4.094	.248	RSVD03500
3.625	4.046	.165	RSVC03625
3.625	4.219	.248	RSVD03625
3.750	4.171	.165	RSVC03750
3.750	4.344	.248	RSVD03750
3.875	4.296	.165	RSVC03875
3.875	4.469	.248	RSVD03875
4.000	4.421	.165	RSVC04000
4.000	4.594	.248	RSVD04000
4.125	4.546	.165	RSVC04125
4.125	4.719	.248	RSVD04125
4.250	4.671	.165	RSVC04250
4.250	4.844	.248	RSVD04250
4.375	4.796	.165	RSVC04375
4.375	4.969	.248	RSVD04375

Rod Diameter	Groove Diameter	Groove Width	TSS Part No.
d_N f8/h9	D_1 H9	L_1 +.008	
4.500	4.921	.165	RSVC04500
4.500	5.094	.248	RSVD04500
4.625	5.219	.248	RSVD04625
4.625	5.432	.319	RSVE04625
4.750	5.344	.248	RSVD04750
4.750	5.557	.319	RSVE04750
4.875	5.469	.248	RSVD04875
4.875	5.682	.319	RSVE04875
5.000	5.594	.248	RSVD05000
5.000	5.807	.319	RSVE05000
5.125	5.719	.248	RSVD05125
5.125	5.932	.319	RSVE05125
5.250	5.844	.248	RSVD05250
5.250	6.057	.319	RSVE05250
5.375	5.969	.248	RSVD05375
5.375	6.182	.319	RSVE05375
5.500	6.094	.248	RSVD05500
5.500	6.307	.319	RSVE05500
5.625	6.219	.248	RSVD05625
5.625	6.432	.319	RSVE05625
5.750	6.344	.248	RSVD05750
5.750	6.557	.319	RSVE05750
6.000	6.594	.248	RSVD06000
6.000	6.807	.319	RSVE06000
6.250	6.844	.248	RSVD06250
6.250	7.057	.319	RSVE06250
6.500	7.094	.248	RSVD06500
6.500	7.307	.319	RSVE06500
6.750	7.344	.248	RSVD06750
6.750	7.557	.319	RSVE06750
7.000	7.594	.248	RSVD07000
7.000	7.807	.319	RSVE07000
7.250	7.844	.248	RSVD07250
7.250	8.057	.319	RSVE07250
7.500	8.094	.248	RSVD07500
7.500	8.307	.319	RSVE07500
7.750	8.344	.248	RSVD07750
7.750	8.557	.319	RSVE07750
8.000	8.807	.319	RSVE08000
8.250	9.057	.319	RSVE08250
8.500	9.307	.319	RSVE08500

Rod Diameter	Groove Diameter	Groove Width	TSS Part No.
d_N f8/h9	D_1 H9	L_1 +.008	
8.750	9.557	.319	RSVE08750
9.000	9.807	.319	RSVE09000
9.250	10.057	.319	RSVE09250
9.500	10.307	.319	RSVE09500
9.750	10.557	.319	RSVE09750
10.000	10.807	.319	RSVE10000
10.000	10.945	.319	RSVF10000
10.500	11.307	.319	RSVE10500
10.500	11.445	.319	RSVF10500
11.000	11.807	.319	RSVE11000
11.000	11.945	.319	RSVF11000
11.500	12.307	.319	RSVE11500
11.500	12.445	.319	RSVF11500
12.000	12.945	.319	RSVF12000
12.500	13.445	.319	RSVF12500
13.000	13.945	.319	RSVF13000
13.500	14.445	.319	RSVF13500
14.000	14.945	.319	RSVF14000
14.500	15.445	.319	RSVF14500
15.000	15.945	.319	RSVF15000
15.500	16.445	.319	RSVF15500
16.000	16.945	.319	RSVF16000
16.500	17.445	.319	RSVF16500
17.000	17.945	.319	RSVF17000
17.500	18.445	.319	RSVF17500
18.000	18.945	.319	RSVF18000
18.500	19.445	.319	RSVF18500
19.000	19.945	.319	RSVF19000
19.500	20.445	.319	RSVF19500
20.000	20.945	.319	RSVF20000
20.500	21.445	.319	RSVF20500
21.000	21.945	.319	RSVF21000
21.500	22.445	.319	RSVF21500
22.000	22.945	.319	RSVF22000
22.500	23.445	.319	RSVF22500
23.000	23.945	.319	RSVF23000
23.500	24.445	.319	RSVF23500
24.000	24.945	.319	RSVF24000
24.500	25.445	.319	RSVF24500

Single-Acting

Low-friction Zurcon® U-Cup

Material:
Zurcon®

Zurcon® U-Cup RU9

DESCRIPTION

Rod seals are particularly exposed to pressure and friction. A long service life is a specific requirement of piston rods. Features such as wear and extrusion resistance, media and temperature compatibility, low friction, compact installation dimensions and ease of assembly are also essential and require the introduction of new products and materials. It is against this background that we have developed the Zurcon® U-Cup RU9.

Due to its special design, behind the dynamic seal lip, the Zurcon® U-Cup RU9 with its structure of slide segments interspersed by back-pumping channels features, excellent back-pumping ability across the entire pressure range. The dynamic seal slide segments also have a micro-structure with excellent tribological and sealing characteristics. As well as increasing the sealing ability of the U-Cup RU9, this also ensures a constant lubrication film underneath the seal sliding surface, reducing breakaway force even after prolonged periods of rest, and reduces dynamic friction force.

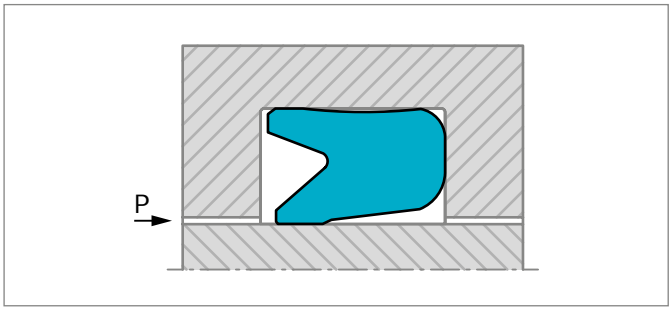

Figure 24: U-Cup, type RU9

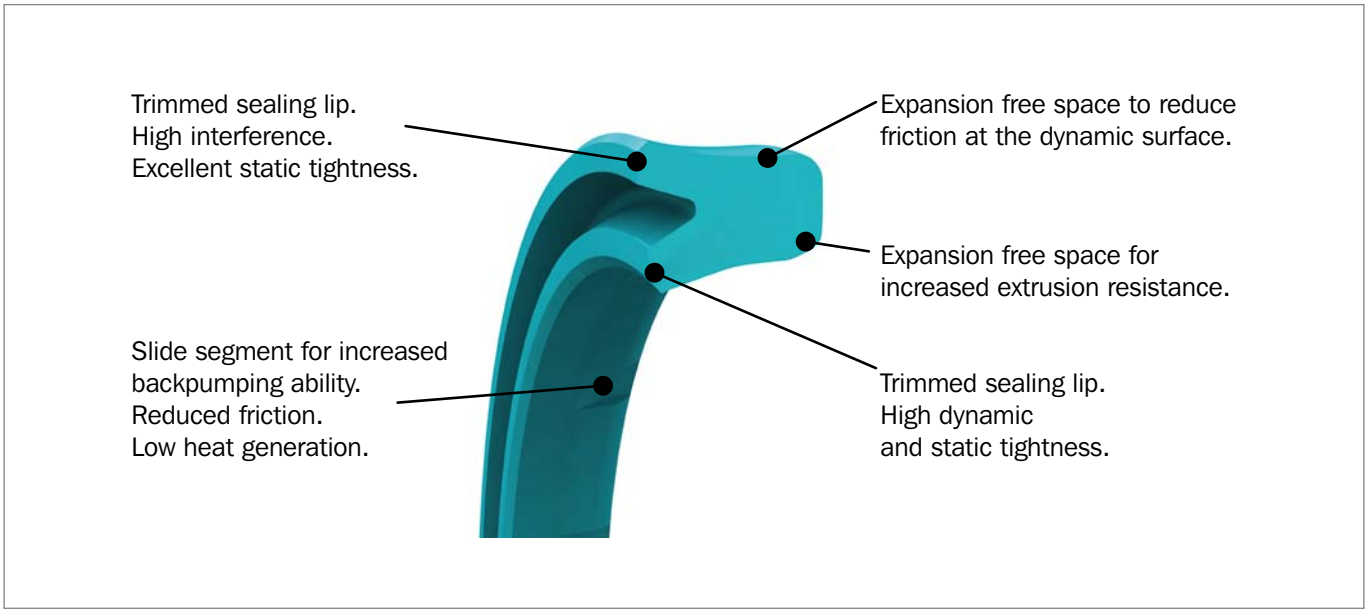

Figure 25: Zurcon® U-Cup RU9 design features

FRICTION

The friction force of U-Cups dramatically increases between 362 and 1,450 psi. The Zurcon® U-Cup RU9 has a unique feature. As the system pressure increases, the contact surface between the U-Cup and the piston rod increases. Once a specific system pressure is reached, the seal deforms to such an extent that its entire friction-generating inside surface gets in contact with the piston rod. Due to the special design of Zurcon® U-Cup RU9 there is improved pressure distribution on the rod. The resulting tribological benefits restrict the increase in friction. When we compare the friction values of conventional U-Cups with those of the Zurcon® U-Cup RU9 the results are self-evident.

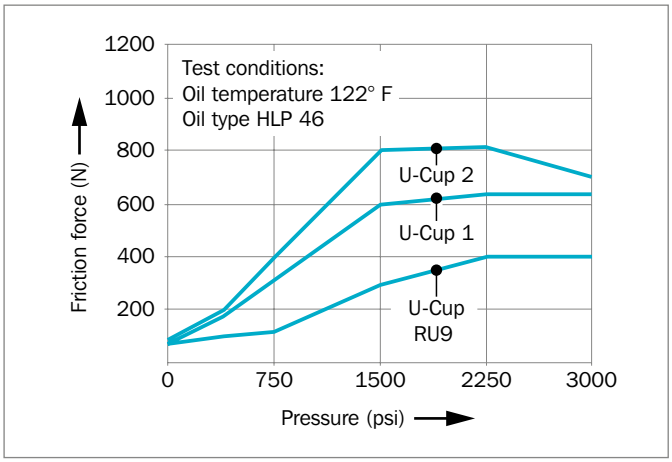

Figure 26: Friction dependent on pressure

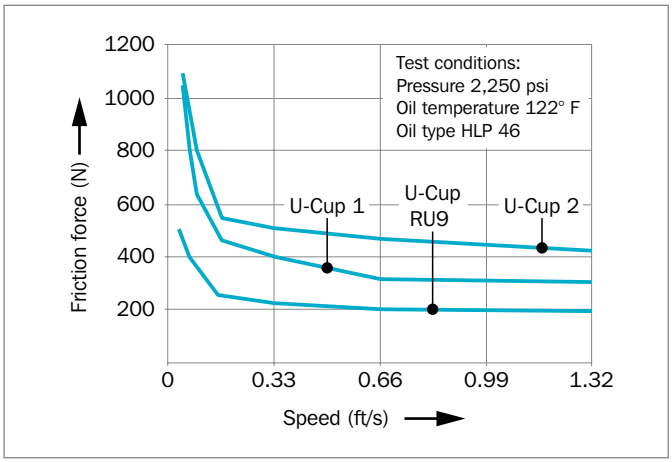

Figure 27: Friction dependent on speed

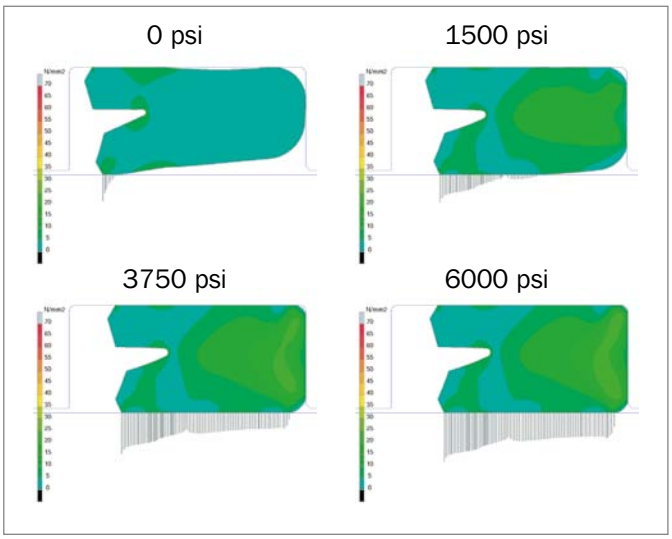

Figure 28: How the Zurcon® U-Cup RU9 performs under pressure

SEALING PERFORMANCE

The high sealing performance is achieved by:

- Interference fit at the external diameter
- Special shape of both trimmed seal lips
- Controlled pressure distribution and hydrodynamic backpumping ability over a wide pressure range

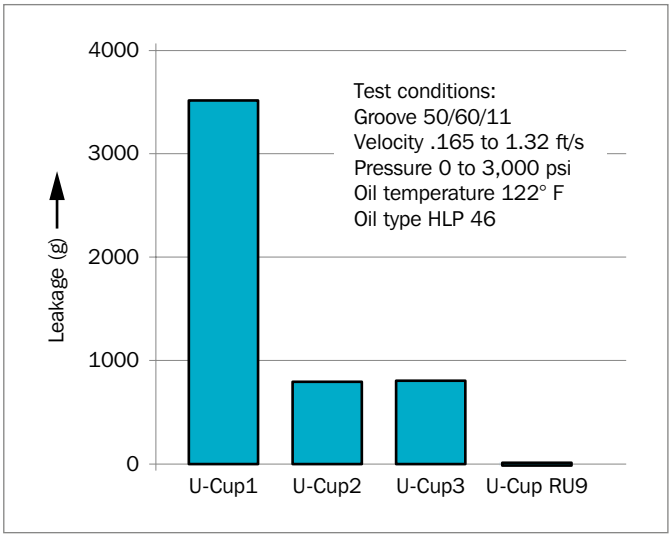

Figure 29: Leakage performance dependent on U-Cup type

RADIAL CLEARANCE

The new Zurcon® RU9 design combined with the special compound properties shows better extrusion resistance compared to a standard U-Cup under all working conditions. The hardware clearance can be increased significantly.

ADVANTAGES

- Lower friction than standard U-Cups
- Lower heat generation than standard U-Cups
- High extrusion resistance
- Excellent dynamic and static sealing
- Optimum environment protection
- Back pumping ability over the entire pressure range achieved by grooved profile
- Suitable with the Zurcon® Buffer Seal as secondary seal in "tandem design"
- Suitable for sealing systems with double scraper
- Seal stability within the groove

MATERIALS

Zurcon® Z20 Standard polyurethane 93 Shore A
Temperature: -31 °F to +230 °F (-35 °C to +110 °C)
Color: Turquoise

Zurcon® Z22 Premium polyurethane 93 Shore A
Temperature: -58 °F to +230 °F (-50 °C to +110 °C)
Color: Dark petrol

The Zurcon® polyurethane has high abrasion resistance, a low compression set, high extrusion resistance and a wide temperature range.

APPLICATION EXAMPLES

Zurcon® U-Cup RU9 can be used in all applications in which previously a conventional U-Cup was applied, such as:

- Hydraulic cylinders
- Construction machinery
- Fork lifts
- Truck cranes
- Telescopic cylinders
- Agricultural machines
- Machine tools
- Injection molding machines
- Hydraulic presses
- Gas spring

In medium/heavy duty applications the preferred solution for tandem rod sealing systems is the combination of the Zurcon® Buffer Seal primary seal and Zurcon® U-Cup RU9 in conjunction with a double acting scraper.

TECHNICAL DATA

Operating conditions:

Pressure:	Up to 5,800 psi (40 MPa)
Velocity:	Up to 1.65 ft/s (0.5 m/s)
Temperature:	
Zurcon® Z20 Standard:	-31 °F to +230 °F (-35 °C to +110 °C)
Media:	
Hydraulic fluids based on mineral oil:	-31 °F to +230 °F (-35 °C to +110 °C)
Synthetic and natural ester HEES, HETG:	up to +140 °F (+60 °C)
Flame-retardant hydraulic fluids HFA/HFB:	up to +104 °F (+40 °C)

IMPORTANT NOTE

The above stated limits for pressure and speed are maximum values individually. Friction heat generated by the combination of pressure and speed may cause local heat built-up. Care should be taken not to apply high values for pressure and speed at the same time.

Installation Recommendation (Inch Rod Series)

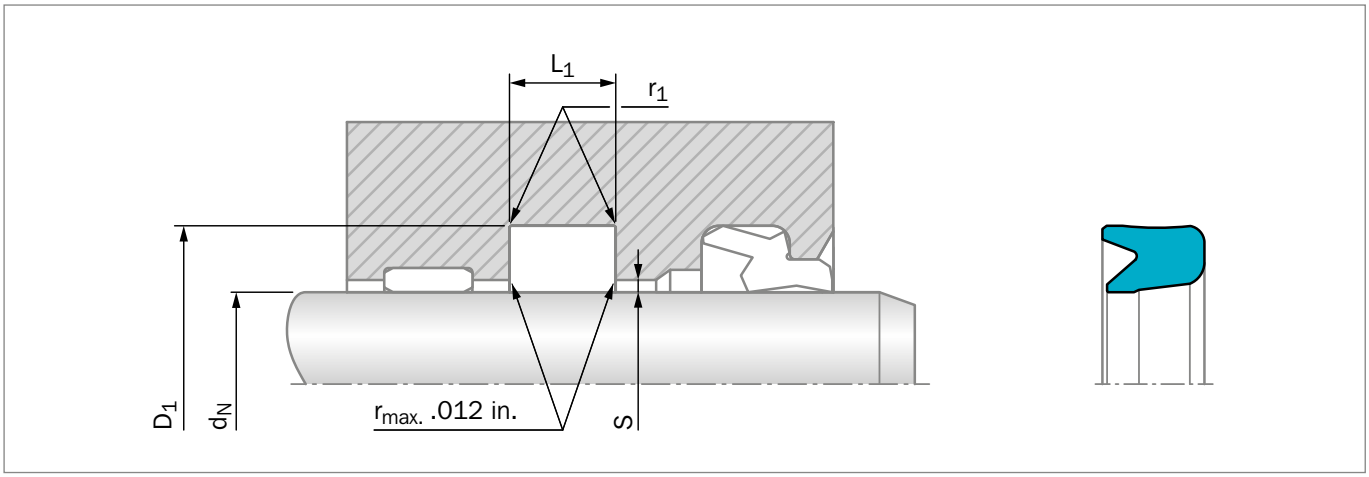

Figure 30: Installation drawing, Gap measure "S" see in Table 16

Table 16: Installation recommendation

TSS Series No.	Rod Diameter d_N f8/h9		Groove Diameter	Groove Width	Radius	Radial Clearance S_{max}		
	Standard Application	Light Application	D_1 H10	L_1 +.010	$r_{1\,max}$	10 MPa 1500 psi	20 MPa 3000 psi	40 MPa 5800 psi
RU9AC	.375 - .749	.750 - 1.250	Ød_N +.250	.250	0.016	.023	.014	.006
RU9BF	.750 - 1.249	1.250 - 2.500	Ød_N +.375	.343	0.016	.023	.014	.006
RU9CG	1.250 - 2.499	2.500 - 4.000	Ød_N +.500	.406	0.016	.023	.014	.006
RU9DH	2.500 - 3-999	4.000 - 5.500	Ød_N +.625	.531	0.016	.023	.014	.006
RU9EK	4.000 - 6.499	6.500 - 7.500	Ød_N +.750	.656	0.024	.023	.014	.006
RU9FL	6.500 - 12.000	-	Ød_N +1.000	.781	0.031	.023	.014	.006

ORDERING EXAMPLE (INCH)

Zurcon® U-Cup Type RU9

Rod Diameter:	d_N = 2.500 inches
Groove Diameter:	D_1 = 3.000 inches
Groove Width:	L_1 = .406 inches
TSS Part No.:	RU9CG2500

TSS Article No. RU9 CG 2500 - Z20

- TSS Series No. — RU9
- Cross Section Series — CG
- Rod Diameter x 1000 — 2500
- Quality Index (Standard) — -
- Material Code — Z20

For other groove dimensions please contact your local Trelleborg Sealing Solutions sales office.

MATERIAL

Standard Zurcon® :	Z20
Special polyurethane:	93 Shore A
Color:	Turquoise

RU	9	A - F	A - L	Rod diameter x 1000	-	Z20
RU=Rod U-Cup	9=RU9 Cross Section	D_1 Groove Diameter A=d_N+0.250 B=d_N+0.375 C=d_N+0.500 D=d_N+0.625 E=d_N+0.750 F=d_N+1.000	L Groove Width Dimension A=0.156/0.166 B=0.218/0.228 C=0.250/0.260 D=0.281/0.291 E=0.313/0.323 F=0.343/0.353 G=0.406/0.416 H=0.531/0.541 J=0.594/0.604 K=0.656/0.666 L=0.781/0.791	Equivalent to Rod (inch to 3 decimal places) Diameter x 1000	Quality Characteristic Code (Standard)	Material Compound

Table 17: Installation dimensions / TSS Part No.

Rod Diameter	Groove Diameter	Groove Width	TSS Part No.
d_N f8/h9	D_1 H10	L_1 +.010	
.500	.750	.250	RU9AC0500
.625	.875	.250	RU9AC0625
.750	1.000	.250	RU9AC0750
.875	1.125	.250	RU9AC0875
1.000	**1.250**	**.250**	**RU9AC1000**
1.125	1.500	.343	RU9BF1125
1.250	**1.625**	**.343**	**RU9BF1250**
1.375	1.750	.343	RU9BF1375
1.500	**2.000**	**.406**	**RU9CG1500**
1.625	2.125	.406	RU9CG1625
1.750	**2.125**	**.343**	**RU9BF1750**
1.750	2.250	.406	RU9CG1750
1.875	2.375	.406	RU9CG1875
2.000	**2.375**	**.343**	**RU9BF2000**
2.000	2.500	.406	RU9CG2000
2.125	2.625	.406	RU9CG2125
2.250	**2.750**	**.406**	**RU9CG2250**
2.375	2.875	.406	RU9CG2375
2.500	**3.000**	**.406**	**RU9CG2500**
2.625	3.125	.406	RU9CG2625
2.750	**3.250**	**.406**	**RU9CG2750**
3.000	**3.500**	**.406**	**RU9CG3000**
3.250	**3.750**	**.406**	**RU9CG3250**
3.375	3.875	.406	RU9CG3375
3.500	**4.000**	**.406**	**RU9CG3500**
3.750	**4.250**	**.406**	**RU9CG3750**

Rod Diameter	Groove Diameter	Groove Width	TSS Part No.
d_N f8/h9	D_1 H10	L_1 +.010	
4.000	**4.500**	**.406**	**RU9CG4000**
4.500	**5.125**	**.531**	**RU9DH4500**
5.000	**5.625**	**.531**	**RU9DH5000**
5.500	**6.125**	**.531**	**RU9DH5500**
6.000	**6.750**	**.656**	**RU9EK6000**
6.500	**7.250**	**.656**	**RU9EK6500**
6.500	7.500	.781	RU9FL6500
7.000	**8.000**	**.781**	**RU9FL7000**
7.500	8.500	.781	RU9FL7500
8.000	9.000	.781	RU9FL8000

The sizes listed in **bold** font are preferred sizes (more likely to be available for immediate shipment).

Single-Acting

O-Ring-Energized Zurcon® Slipper Seal

Material:
Zurcon® and Elastomer

Zurcon® Rimseal

Description

When the field of application and system requirements make high demands on leakage control and operational reliability, a redundant sealing system is necessary to ensure reliable sealing of hydraulic cylinders at the piston rod. Sealing systems with elastomer-energized polymer seals are a proven answer to widely varying demands for standardized grooves, simple installation, resistance to media, high and low temperatures and pressures. The system offers enormous flexibility in the choice and matching of materials.

The piston rod sealing system for hydraulic cylinders subject to heavy loads should consist of three elements:

The Turcon® Stepseal® 2K is used as primary seal. This seal element offers the back pumping property necessary for redundant rod seal systems as well as good resistance to high and low temperatures and high media resistance.

The Zurcon® Rimseal was developed as the secondary seal in this system to ensure reliable sealing of thin oil films at low secondary pressures. A Zurcon® material (polyurethane Shore D 58) is used combined with a new seal profile.

The contact pressure curve is automatically optimized under dynamic conditions.

The final outer element of the redundant sealing system is a double-acting scraper seal (e.g. DA 24, DA 22, DA 17, Turcon® Excluder® 2, Turcon® Excluder® 5).

The optimum sealing system thus consists of three independent lip seals installed in line, whereby the hardness of the material decreases from the pressure side to the atmospheric side.

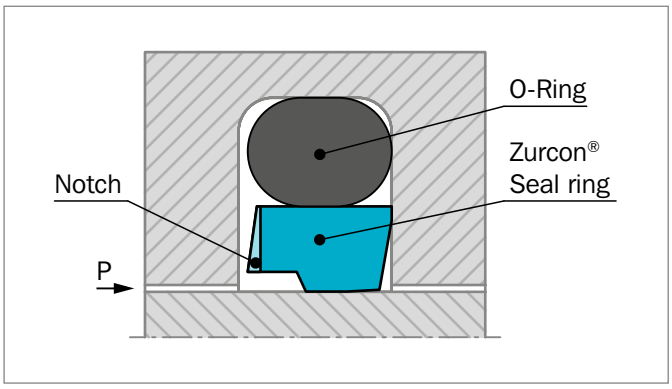

Figure 31: Zurcon® Rimseal

METHOD OF OPERATION

The Zurcon® Rimseal is an O-Ring-energized seal element. The changes in seal position in the groove necessary for an optimum sealing function are guaranteed by the combination of the two component parts (O-Ring and seal ring).

In order to achieve a contact pressure curve which enhances the sealing effect, the seal has a chamfer on the low pressure side. When under pressure and exposed to friction against the piston rod, this chamfer causes the seal to tilt slightly so that the seal ring is forced against the side of the groove. This creates an area of maximum pressure at the edge of the seal.

When the Zurcon® Rimseal is used in a system with a double-acting scraper DA 24 (DA 22, DA 17, Excluder® 2, Excluder® 5), the sealing function of the system must be assured even if pressure build-up occurs between the Zurcon® Rimseal and the double-acting scraper seal.

For this reason, the high-pressure side of the seal ring also has a chamfer which, in the event of a build-up of pressure behind the Zurcon® Rimseal, comes into contact with the flank of the groove. The Zurcon® Rimseal moves in the groove so that a contact pressure distribution is obtained on the piston rod which enhances the back pumping effect.

ADVANTAGES

- High static and dynamic leak tightness
- Low friction for reduced power loss
- High wear resistance for long service life
- Small groove
- Easy installation
- ISO/DIN grooves optional
- Available for any diameter from .040 inches (8mm) to 86.500 inches (2,200mm)

APPLICATION EXAMPLES

- Mobile hydraulics
- Standard cylinders
- Machine tools
- Injection molding machines
- Presses

TECHNICAL DATA

Pressure:	In tandem system: Up to 8,700 psi (60 MPa) As an individual element: 3,625 psi (25 MPa)
Velocity:	16 ft/s (5 m/s) with short strokes (<40.000 inches (1 m)) in tandem system
Temperature:	-49 °F to +230 °F (-45 °C to +110 °C) depending on O-Ring material
Media:	Hydraulic fluids - Mineral oil - Synthetic and natural esters - HEES, HETG up to +140 °F (+60 °C) - Flame retardant fluids HFA, HFC

IMPORTANT NOTE

The above data are maximum values and cannot be used at the same time. e.g. the maximum operating speed depends on material type, pressure, temperature and gap value. Temperature range also dependent on medium.

MATERIAL

The Zurcon® Rimseal is made in the following material combinations as standard:

Seal ring:	Zurcon® Z54 Special polyurethane 58 Shore D	
O-Ring:	NBR, 70 Shore A NBR, 70 Shore A Low temp. depending on the temperature	N T
Set code:	Z54N or Z54T	

SERIES

The Zurcon® Rimseal is a system seal and is preferably used in tandem sealing systems in conjunction with the Turcon® Stepseal® 2K. The cross section series is identical with those for the Turcon® Stepseal® 2K.

REDUNDANT SEALING SYSTEM

Redundant sealing systems are used where the application conditions no longer permit reliable sealing over the demanded service life with a single seal.

The property of the tandem sealing system is particularly important during cold starts when, due to the very high viscosity of the oil, the primary seal allows oil to pass as the piston rod is extended. In the tandem system the oil is heated as a result of the friction at the primary seal and is then reliably wiped off - at a now lower viscosity - by the secondary seal, the Zurcon® Rimseal.

As the piston rod is retracted, the oil is stored in the reservoir between the seals, and is then pumped back against the system pressure by the hydrodynamics in the seal clearance of the Turcon® Stepseal® 2K.

Particularly with strokes of more than 40.000 inches (1 meter), constructional measures have to be taken to provide a storage chamber between the seals.

The Zurcon® Rimseal is designed so that it also has the back pumping properties necessary when using a double-acting scraper in the rod sealing system.

Due to the controlled sealing behavior of the individual elements in the sealing system and the appropriate combination of the seal materials, a rod seal system is obtained with a low overall friction.

The Figure 32 shows a redundant rod seal system consisting of Turcon® Stepseal® 2K, Zurcon® Rimseal and rod scraper DA 22 arrangement.

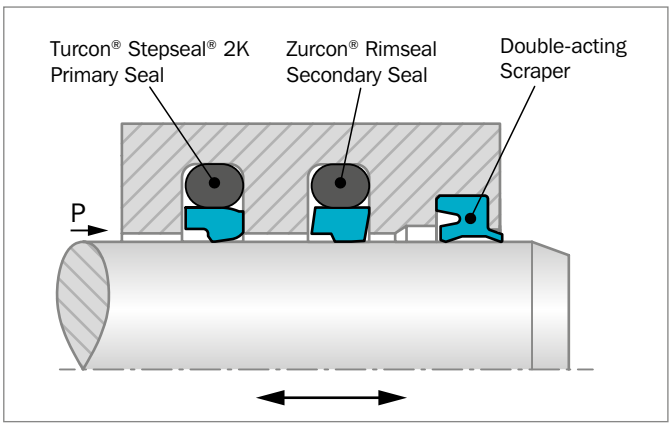

Figure 32: Zurcon® Rimseal in tandem configuration

Installation Recommendation (Inch Rod Series)

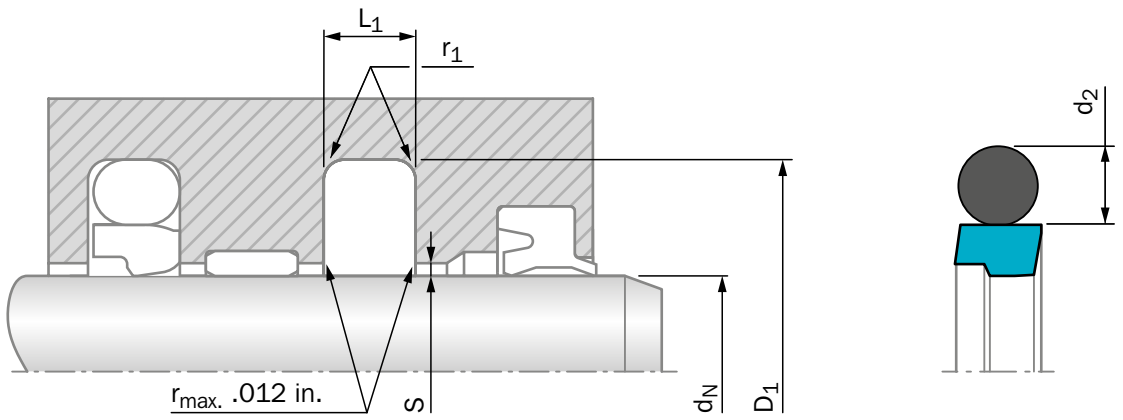

Figure 33: Installation drawing

Table 18: Installation recommendation

TSS Series No.	Rod Diameter d_N f8/h9			Groove Diameter	Groove Width	Radius	Radial Clearance S_{max}		O-Ring Cross-Section
	Standard Application	Light Application	Heavy Duty Application	D_1 H9	L_1 +.008	r_1 max	10 MPa 1500 psi	20 MPa 3000 psi	d_2
RRF1	.313 - .749	.750 - 1.499	-	d_N +.287	.126	.015	.015	.010	.103
RRF2	.750 - 1.499	1.500 - 7.999	.313 - .749	d_N +.421	.165	.020	.015	.010	.139
RRF3	1.500 - 7.999	8.000 - 9.999	.750 - 1.499	d_N +.594	.248	.030	.020	.012	.210
RRF4	8.000 - 9.999	10.000 - 25.500	1.500 - 7.999	d_N +.807	.319	.035	.025	.015	.275
RRF5	10.000 - 25.500	-	8.000 - 10.000	d_N +.945	.319	.035	.025	.015	.275

ORDERING EXAMPLE

Zurcon® Rimseal complete with NBR O-Ring Series RRF4 (from Table 18).

Rod diameter:	d_N = 8.000 inches
TSS Part No.:	RRF408000 from Table 19

The TSS Part No. for all sizes not shown in Table 19 can be determined following the example opposite.

TSS Article No. RRF4 08000 - Z54 N*

- TSS Series No. — RRF4
- Rod Diameter x 1000** — 08000
- Quality Index (Standard) — -
- Material Code (Seal Ring) — Z54
- Material code (O-Ring) — N*

* Zurcon® Rimseal is always supplied as a set with a Nitrile O-Ring, code N or T.

** For diameters ≥102 inches please consult your Trelleborg Sealing Solutions sales office for special part no.

NOTE

Turned - other diameters also available, no tool costs.

Table 19: Installation dimensions / TSS Part No.

Rod Diameter	Groove Diameter	Groove Width	TSS Part No.
d_N f8/h9	D_1 H9	L_1 +.008	
.125	.318	.087	RRF000125
.188	.381	.087	RRF000188
.250	.443	.087	RRF000250
.313	.506	.087	RRF000313
.313	.600	.126	RRF100313
.375	.568	.087	RRF000375
.375	.662	.126	RRF100375
.438	.631	.087	RRF000438
.438	.725	.126	RRF100438
.500	.693	.087	RRF000500
.500	.787	.126	RRF100500
.563	.756	.087	RRF000563
.563	.850	.126	RRF100563
.625	.818	.087	RRF000625
.625	.912	.126	RRF100625
.688	.881	.087	RRF000688
.688	.975	.126	RRF100688
.750	.943	.087	RRF000750
.750	1.037	.126	RRF100750
.750	**1.171**	**.165**	**RRF200750**
.813	1.100	.126	RRF100813
.813	1.234	.165	RRF200813
.875	1.162	.126	RRF100875
.875	**1.296**	**.165**	**RRF200875**
.938	1.225	.126	RRF100938
.938	1.359	.165	RRF200938
1.000	1.287	.126	RRF101000
1.000	**1.421**	**.165**	**RRF201000**
1.063	1.350	.126	RRF101063
1.063	1.484	.165	RRF201063
1.125	1.412	.126	RRF101125
1.125	**1.546**	**.165**	**RRF201125**
1.188	1.475	.126	RRF101188
1.188	1.609	.165	RRF201188
1.250	1.537	.126	RRF101250
1.250	**1.671**	**.165**	**RRF201250**
1.313	1.600	.126	RRF101313
1.313	1.734	.165	RRF201313
1.375	1.662	.126	RRF101375
1.375	**1.796**	**.165**	**RRF201375**
1.438	1.725	.126	RRF101438

Rod Diameter	Groove Diameter	Groove Width	TSS Part No.
d_N f8/h9	D_1 H9	L_1 +.008	
1.438	1.859	.165	RRF201438
1.500	1.787	.126	RRF101500
1.500	1.921	.165	RRF201500
1.500	**2.094**	**.248**	**RRF301500**
1.563	1.984	.165	RRF201563
1.563	2.157	.248	RRF301563
1.625	2.046	.165	RRF201625
1.625	**2.219**	**.248**	**RRF301625**
1.688	2.109	.165	RRF201688
1.688	2.282	.248	RRF301688
1.750	2.171	.165	RRF201750
1.750	**2.344**	**.248**	**RRF301750**
1.813	2.234	.165	RRF201813
1.813	2.407	.248	RRF301813
1.875	2.296	.165	RRF201875
1.875	**2.469**	**.248**	**RRF301875**
1.938	2.359	.165	RRF201938
1.938	2.532	.248	RRF301938
2.000	2.421	.165	RRF202000
2.000	**2.594**	**.248**	**RRF302000**
2.125	2.546	.165	RRF202125
2.125	2.719	.248	RRF302125
2.250	2.671	.165	RRF202250
2.250	**2.844**	**.248**	**RRF302250**
2.375	2.796	.165	RRF202375
2.375	2.969	.248	RRF302375
2.500	2.921	.165	RRF202500
2.500	**3.094**	**.248**	**RRF302500**
2.625	3.046	.165	RRF202625
2.625	3.219	.248	RRF302625
2.750	3.171	.165	RRF202750
2.750	**3.344**	**.248**	**RRF302750**
2.875	3.296	.165	RRF202875
2.875	3.469	.248	RRF302875
3.000	3.421	.165	RRF203000
3.000	**3.594**	**.248**	**RRF303000**
3.125	3.546	.165	RRF203125
3.125	3.719	.248	RRF303125
3.250	3.671	.165	RRF203250
3.250	**3.844**	**.248**	**RRF303250**
3.375	3.796	.165	RRF203375

Rod Diameter	Groove Diameter	Groove Width	TSS Part No.
d_N f8/h9	D_1 H9	L_1 +.008	
3.375	3.969	.248	RRF303375
3.500	3.921	.165	RRF203500
3.500	**4.094**	**.248**	**RRF303500**
3.625	4.046	.165	RRF203625
3.625	4.219	.248	RRF303625
3.750	4.171	.165	RRF203750
3.750	**4.344**	**.248**	**RRF303750**
3.875	4.296	.165	RRF203875
3.875	4.469	.248	RRF303875
4.000	4.421	.165	RRF204000
4.000	**4.594**	**.248**	**RRF304000**
4.125	4.546	.165	RRF204125
4.125	4.719	.248	RRF304125
4.250	4.671	.165	RRF204250
4.250	**4.844**	**.248**	**RRF304250**
4.375	4.796	.165	RRF204375
4.375	4.969	.248	RRF304375
4.500	4.921	.165	RRF204500
4.500	**5.094**	**.248**	**RRF304500**
4.625	5.219	.248	RRF304625
4.625	5.432	.319	RRF404625
4.750	**5.344**	**.248**	**RRF304750**
4.750	5.557	.319	RRF404750
4.875	5.469	.248	RRF304875
4.875	5.682	.319	RRF404875
5.000	**5.594**	**.248**	**RRF305000**
5.000	5.807	.319	RRF405000
5.125	5.719	.248	RRF305125
5.125	5.932	.319	RRF405125
5.250	**5.844**	**.248**	**RRF305250**
5.250	6.057	.319	RRF405250
5.375	5.969	.248	RRF305375
5.375	6.182	.319	RRF405375
5.500	**6.094**	**.248**	**RRF305500**
5.500	6.307	.319	RRF405500
5.625	6.219	.248	RRF305625
5.625	6.432	.319	RRF405625
5.750	**6.344**	**.248**	**RRF305750**
5.750	6.557	.319	RRF405750
6.000	**6.594**	**.248**	**RRF306000**
6.000	6.807	.319	RRF406000

Rod Diameter	Groove Diameter	Groove Width	TSS Part No.
d_N f8/h9	D_1 H9	L_1 +.008	
6.250	6.844	.248	RRF306250
6.250	7.057	.319	RRF406250
6.500	**7.094**	**.248**	**RRF306500**
6.500	7.307	.319	RRF406500
6.750	7.344	.248	RRF306750
6.750	7.557	.319	RRF406750
7.000	**7.594**	**.248**	**RRF307000**
7.000	7.807	.319	RRF407000
7.250	7.844	.248	RRF307250
7.250	8.057	.319	RRF407250
7.500	**8.094**	**.248**	**RRF307500**
7.500	8.307	.319	RRF407500
7.750	8.344	.248	RRF307750
7.750	8.557	.319	RRF407750
8.000	**8.807**	**.319**	**RRF408000**
8.250	9.057	.319	RRF408250
8.500	9.307	.319	RRF408500
8.750	9.557	.319	RRF408750
9.000	**9.807**	**.319**	**RRF409000**
9.250	10.057	.319	RRF409250
9.500	10.307	.319	RRF409500
9.750	10.557	.319	RRF409750
10.000	10.807	.319	RRF410000
10.000	**10.945**	**.319**	**RRF510000**
10.500	11.307	.319	RRF410500
10.500	11.445	.319	RRF510500
11.000	11.807	.319	RRF411000
11.000	**11.945**	**.319**	**RRF511000**
11.500	12.307	.319	RRF411500
11.500	12.445	.319	RRF511500
12.000	**12.945**	**.319**	**RRF512000**
12.500	13.445	.319	RRF512500
13.000	13.945	.319	RRF513000
13.500	14.445	.319	RRF513500
14.000	**14.945**	**.319**	**RRF514000**
14.500	15.445	.319	RRF514500
15.000	15.945	.319	RRF515000
15.500	16.445	.319	RRF515500
16.000	**16.945**	**.319**	**RRF516000**
16.500	17.445	.319	RRF516500
17.000	17.945	.319	RRF517000

Rod Diameter	Groove Diameter	Groove Width	TSS Part No.
d_N f8/h9	D_1 H9	L_1 +.008	
17.500	18.445	.319	RRF517500
18.000	**18.945**	**.319**	**RRF518000**
18.500	19.445	.319	RRF518500
19.000	19.945	.319	RRF519000
19.500	20.445	.319	RRF519500
20.000	**20.945**	**.319**	**RRF520000**

The sizes listed in **bold** font are preferred sizes (more likely to be available for immediate shipment).

Single-Acting

Zurcon® Rod Buffer Seal

with Integrated Back-Up Ring

Material:
Zurcon® and POM

Zurcon® Buffer Seal

DESCRIPTION

In heavy duty applications, leak-free performance and high service life cannot be assured by a single sealing element; therefore, specially developed system seals are arranged in series, building a tandem configuration.

Each sealing element in a system has its specific function and their interaction needs to be secured to get a redundant sealing system. The primary seal in Zurcon® material has excellent wear and extrusion resistance under extreme working conditions. It allows a fine lubrication film past this first barrier, ensuring the necessary lubrication of the secondary sealing element for long service life.

The tandem arrangement requires an outstanding backpumping ability of the primary seal and the secondary seal, if a double acting scraper is installed.

The single-acting Zurcon® Buffer Seal is designed as a heavy duty primary rod seal. The design of the product incorporates a combination of a Zurcon® sealing ring along with a back-up ring.

By utilizing two materials, the performance of the product is enhanced and life is extended. The Zurcon® Buffer Seal is designed in such a way that sealing performance is not compromised under system pressure extremes. At low system pressure, the resilience of the Zurcon® material allows for effective sealing. At high system pressure, the back-up ring is designed to contract into the extrusion gap, protecting the Zurcon® seal ring.

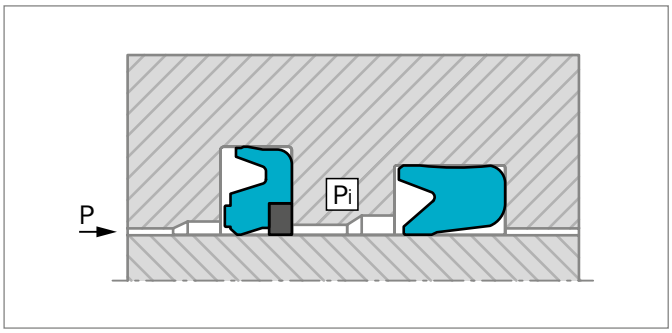

Figure 34: Tandem configuration

FRICTION

The Zurcon® Buffer Seal with its special U shape and its rounded dynamic lip is able to guarantee an optimal pressure distribution and a constant lubrication of the rod across the entire pressure range.

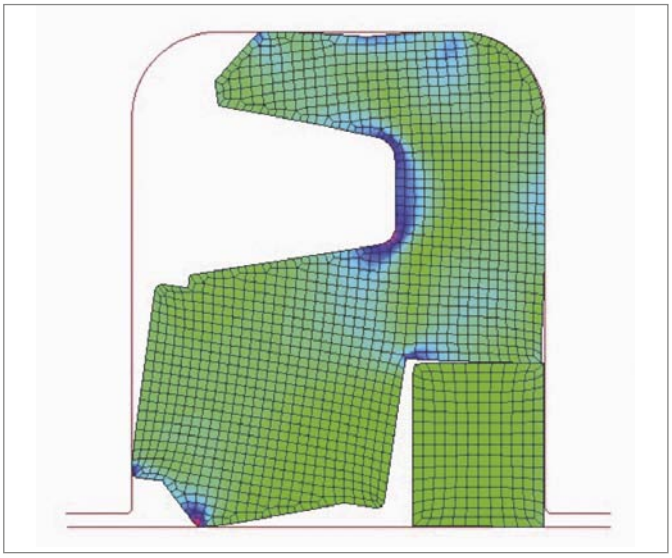

Figure 35: Zurcon® Buffer Seal un-pressurized

In un-pressurized conditions head-on slots on the dynamic lip assure right positioning avoiding any risk of blow-by. The Zurcon® Buffer Seal is ready for fast activation protecting the secondary seal from the peak of pressure.

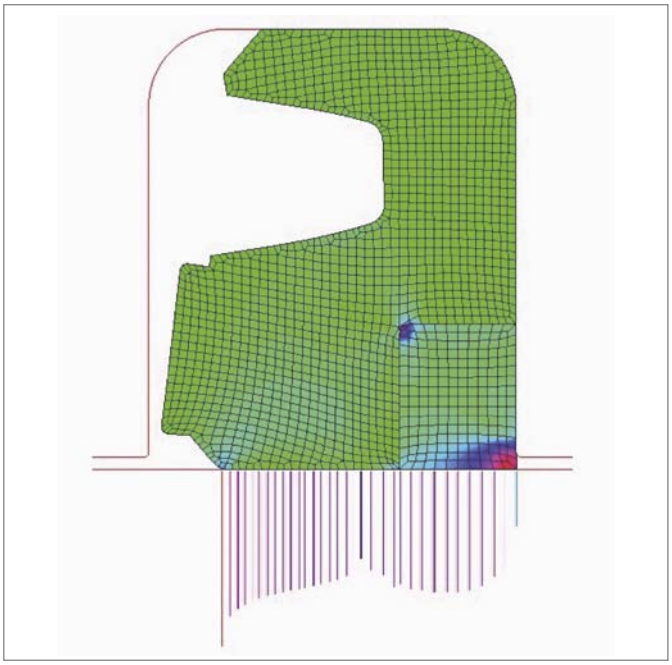

Figure 36: Pressure distribution at 5,800 psi (40 MPa)

PRESSURE RELIEF

In a tandem configuration the Zurcon® Buffer Seal must assure quick and complete pressure relief in order to reduce friction and wear of the secondary seal. Thus increasing the life and overall sealing performance. The relief mechanism is activated by the special seal design through its thin, short and flexible static lip. The radial channels on the back side offer the fluid a direct stream up to both lips. A minimum difference between the pressure trapped and the pressure in the chamber is able to deflect the seal and recover the same pressure level.

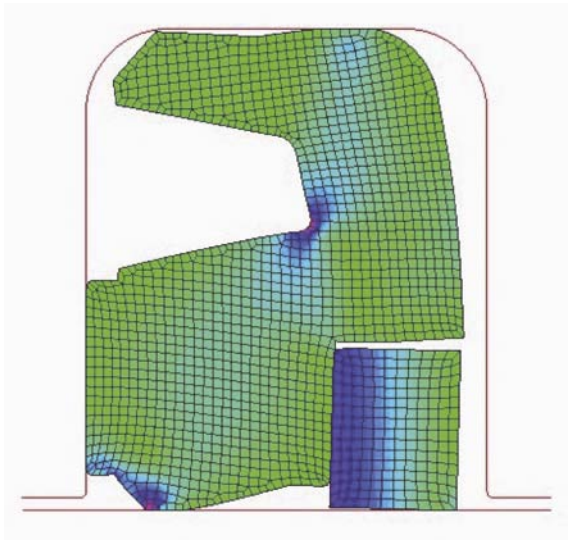

Figure 37: Pressure relief with a back pressure bigger of 72.5 psi (0.5 MPa)

ADVANTAGES

- Manufactured from Zurcon® and high-performance materials
- Conforms to ISO 7425/2 groove standards
- Suitable also for Stepseal® groove
- Excellent back-pumping over entire pressure range
- Resistant to high temperature and pressure
- Special design of dynamic seal lip for superior performance
- Designed with radial relief notches to prevent pressure trapping
- Superior wear and abrasion resistance
- Low compression set

APPLICATION EXAMPLES

Medium and heavy duty applications:

- Mobile equipment
- Lift trucks
- Earthmoving equipment

MATERIALS - STANDARD APPLICATION

For hydraulic components in mineral oils or media with good lubricating performance.

Seal ring: Zurcon® Z20 standard polyurethane

Back-up ring: Polyacetal resin (POM)

Set reference: Z2054

MATERIALS - LOW TEMPERATURE APPLICATION

Seal ring: Zurcon® Z22 premium polyurethane

Back-up ring: Polyacetal resin (POM)

Set reference: Z2254

Zurcon® polyurethane has high abrasion resistance, a low compression set, high extrusion resistance and a wide temperature range.

TECHNICAL DATA

Operating conditions: The Zurcon® Buffer Seal is designed for high pressure rod sealing applications in extreme conditions.

Pressure:	Up to 5,800 psi (40 MPa)
Velocity:	Up to 3.30 ft/s (1 m/s)
Temperature:	
Zurcon® Z20 Standard:	-31 °F to +230 °F (-35 °C to +110 °C)
Zurcon® Z22 Premium:	-58 °F to +230 °F (-50 °C to +110 °C)
Media:	
Hydraulic fluids based on mineral oil:	-31 °F to +230 °F (-35 °C to +110 °C)
Synthetic and natural ester HEES, HETG:	Up to +140 °F (+60 °C)
Flame-retardant hydraulic fluids HFA/HFB:	Up to +104 °F (+40 °C)

IMPORTANT NOTE

The above data are maximum values and cannot be used at the same time. e.g. the maximum operating speed depends on material type, pressure, temperature and gap value. Temperature range also dependent on medium.

Installation Recommendation (Inch Rod Series)

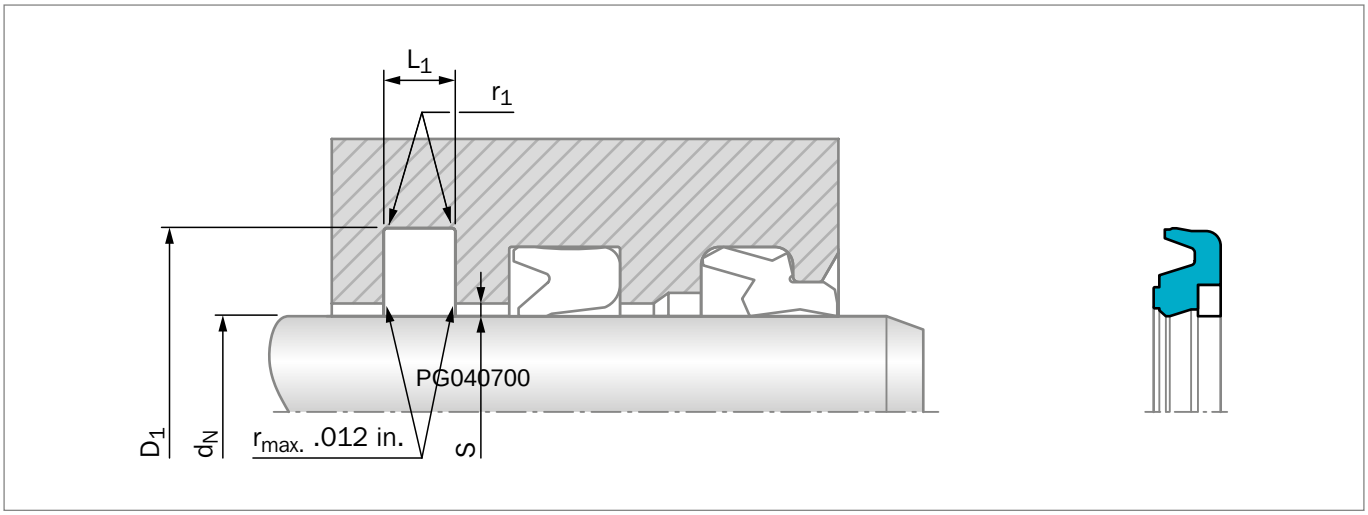

Figure 38: Installation drawing

Table 20: Installation recommendation

TSS Series No.	Rod Diameter d_N f8/h9	Groove Diameter	Groove Width	Radius	Radial Clearance S_{max}		
		D_1 H9	L_1 +.008	$r_{1\,max}$	35 MPa 5000 psi	40 MPa 5800 psi	50 MPa 7250 psi
RUH3	1.500 - 7.874	d_N +.594	.248	.030	.016	.010	.005
RUH4	7.875 -	d_N +.807	.319	.035	.016	.010	.005

ORDERING EXAMPLE

Zurcon® Buffer Seal

TSS Series No.:	RUH3B
Rod Diameter:	d_N = 6.000 inches
TSS Part No.:	RUH3B6000

TSS Article No. RUH 3B 6000 - Z2054

- Zurcon Buffer Seal
- Cross Section Series
- Rod Diameter x 1000
- Quality Index (Standard)
- Material Code (Seal Ring)

MATERIAL

Compound: Z2054
(Zurcon® Z20 + POM Back-up ring)

NOTES

1) Tolerances used are per ISO-286; ISO System of Limits and Fits. The tolerances are converted from metric and rounded to the nearest three place decimal.
2) The clearance stated as S in the above table are for when the seal is specified with Slydring bearings. When not incorporating Slydring bearings, the diametral clearance should be reduced.
3) Consult your local Trelleborg Sealing Solutions sales office for diameters that exceed those listed in the above table.

Table 21: Installation dimensions / TSS Part No.

Rod Diameter	Groove Diameter	Groove Width	TSS Part No.
d_N f8/h9	D_1 H9	L_1 +.008	
2.000	**2.594**	**.248**	**RUH3B2000**
2.250	**2.844**	**.248**	**RUH3B2250**
2.500	**3.094**	**.248**	**RUH3B2500**
2.750	**3.344**	**.248**	**RUH3B2750**
3.000	**3.594**	**.248**	**RUH3B3000**
3.250	**3.844**	**.248**	**RUH3B3250**
3.500	**4.094**	**.248**	**RUH3B3500**
3.750	**4.344**	**.248**	**RUH3B3750**
4.000	**4.594**	**.248**	**RUH3B4000**
4.500	**5.094**	**.248**	**RUH3B4500**
5.000	**5.594**	**.248**	**RUH3B5000**
5.500	**6.094**	**.248**	**RUH3B5500**
6.000	**6.594**	**.248**	**RUH3B6000**
6.500	**7.094**	**.248**	**RUH3B6500**
7.000	**7.594**	**.248**	**RUH3B7000**
8.000	**8.807**	**.319**	**RUH4B8000**

The sizes listed in **bold** font are preferred sizes (more likely to be available for immediate shipment).

Double-Acting

O-Ring-Energized Turcon® Slipper Seal

Material:
Turcon® , Zurcon® and Elastomer

Turcon® Glyd Ring® T*

■ Description

Turcon® Glyd Ring® T is a further technical development of the Turcon® Glyd Ring® seal which has been successfully used for decades. It is fully interchangeable with the earlier Glyd Ring® seals in all new applications. Glyd Ring® T meets all the market demands for a function-specific seal solution, observing economic and ecological aspects.

The benefits of the patented seal concept are provided by the innovative functional principle of the trapezoidal profile cross-section.

Both lateral profile flanks are inclined so that the seal profile tapers towards the seal surface. The profile can thus retain the robust and compact form typical of piston seals without losing any of the flexibility required to achieve a pressure-related maximum compression (Figure 39).

The edge angle created by the special Glyd Ring® T cross-sectional form permits an additional degree of freedom and enables a slight tilting movement of the seal. The maximum compression is always shifted towards the area of the seal edge directly exposed to the pressure. On the low-pressure edge of the seal, on the other hand, the Glyd Ring® T exhibits only zones with neutral strains without compressive or shearing loads, effectively reducing the danger of gap extrusion. The resulting benefits for the user can be seen in the following list.

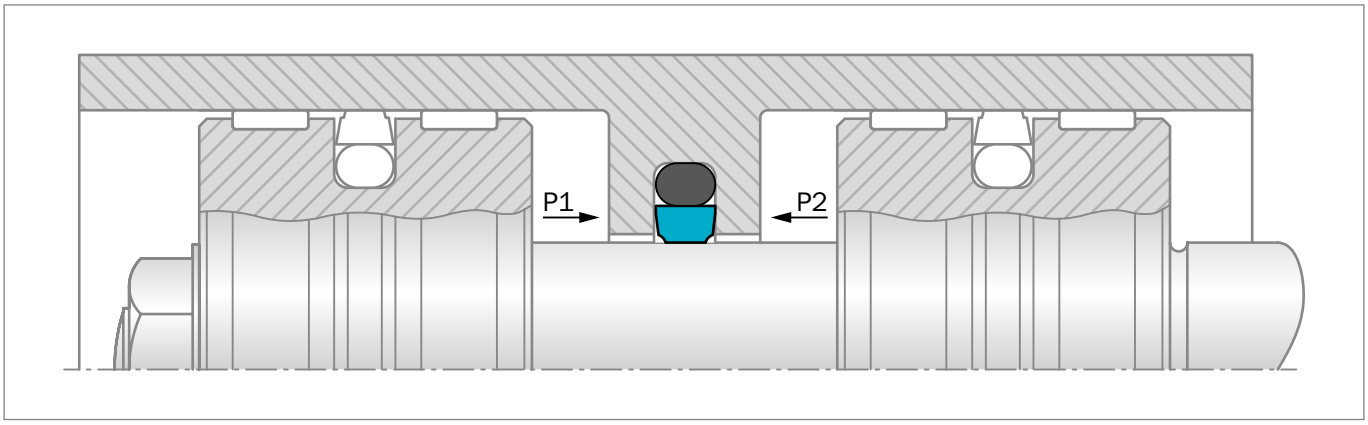

Figure 39: Turcon® Glyd Ring® T

ADVANTAGES

The benefits offered to date by the Glyd Ring® are still retained in full, and are now complemented by a number of further important advantages:

- Very good static leak-tightness
- Increased clearance possible (approx. +50%), depending on the operating conditions
- Low friction, no stick-slip effect
- Simple groove design
- Available for all rod diameters up to 102 inches (2,600mm)

* Patent-No.:

DE	41 40833 C3
EP	0 582 593
Japan	2 799 367
USA	5,433,452

APPLICATION EXAMPLES

The Turcon® Glyd Ring® T is the recommended sealing element for double acting inside sealing seal for hydraulic components such as:

- Special Cylinders
- Pumps and valves
- Machine tools
- Robotics/manipulators
- Presses

It is particularly recommended for heavy duty and large diameter applications.

TECHNICAL DATA

Operating Pressure:	Up to 8,700 psi (60 MPa)
Velocity:	Up to 50 ft/s (15 m/s)
Temperature:	-49 °F to +392 °F (-45 °C to +200 °C) (depending on O-Ring material)
Media:	Mineral oil-based hydraulic fluids, flame retardant hydraulic fluids, environmentally safe hydraulic fluids (bio-oils), water, air and others, depending on the O-Ring material (see Table 22)
Clearance:	The maximum permissible radial clearance S_{max} is shown in Table 23 as a function of the operating pressure and functional diameter.

IMPORTANT NOTE

The above data are maximum values and cannot be used at the same time. e.g. the maximum operating speed depends on material type, pressure, temperature and gap value. Temperature range also dependent on medium.

MATERIALS

Standard Application:
For hydraulic components with reciprocating movement in mineral oils containing zinc or medium with good lubricating performance

Seal Ring: Turcon® T46

Energizer: NBR, 70 Shore A N
FKM, 70 Shore A V
depending on the temperature

Set code: T46N or T46V

Special Application:
Non-lubricating fluids or pneumatic applications require self-lubricating sealing materials. Therefore we recommend:

Seal Ring: Turcon® T40

Energizer: NBR, 70 Shore A N
FKM, 70 Shore A V
depending on the temperature

Set code: T40N or T40V

If rougher surface finish must be sealed, we recommend:

Seal Ring: Zurcon® Z53

Energizer: NBR, 70 Shore A N

Set code: Z53N

Table 22: Turcon® and Zurcon® Materials for Glyd Ring® T

Material, Applications, Properties	Code	O-Ring Material Shore A	Code	O-Ring Operating Temp.* °F	Mating Surface Material	PSI Max.
Turcon® M12 First material choice for seals in linear motion Overall improved properties For new and updated applications For all commonly used hydraulic fluids including fluids with low lubrication performance Lowest friction and best sliding properties Lowest wear on seals Improved absorption of abrasive contaminants Low wear or abrasion of counter surface Mineral fiber and additives fillers Color: Dark gray	M12	NBR-70	N	-22 to +212	Steel Steel hardened Steel chrome plated (rod) Steel plated (rod) Cast iron Stainless steel Titanium	7,250
		NBR-70 Low temp.	T	-49 to +176		
		FKM-70	V	+14 to +392		
Turcon® T46 Standard material for hydraulics, high compressive strength, good sliding and wear properties, good extrusion resistance BAM tested Bronze filled Color: Grayish to dark brown	T46	NBR-70	N	-22 to +212	Steel hardened Steel chrome plated Cast iron	7,250
		NBR-70 Low temp.	T	-49 to +176		
		FKM-70	V	+14 to +392		
Turcon® T40 For all lubricating and non-lubricating hydraulic fluids, hydraulic oils without zinc, water hydraulic, soft mating surfaces, good extrusion resistance Surface texture not suitable for gases Carbon fiber-filled Color: Gray	T40	NBR-70	N	-22 to +212	Steel Steel chrome plated Cast iron Stainless steel Aluminum Bronze Alloys	3,625
		NBR-70 Low temp.	T	-49 to +176		
		FKM-70	V	+14 to +392		
		EPDM-70	E**	-49 to +293		
Zurcon® Z53*** For lubricating hydraulic fluids, high abrasion resistance, high extrusion resistance,limited chemical resistance Color: Yellow to light-brown	Z53	NBR-70	N	-22 to +212	Steel Steel chrome plated Cast iron Ceramic coating Stainless steel	8,700
		NBR-70 Low temp.	T	-49 to +176		

* The O-Ring operation temperature is only valid in mineral hydraulic oil.

** Material not suitable for mineral oils.

*** max. Ø 102 inches (2,600mm)

BAM: Tested by "Bundesanstalt Materialprüfung, Germany"

Highlighted materials are standard.

Installation Recommendation (Inch Rod Series)

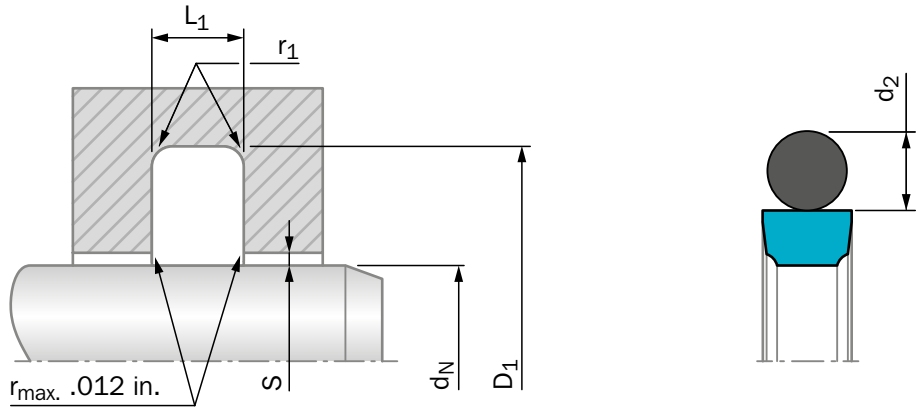

Figure 40: Installation drawing

Table 23: Installation recommendation

TSS Series No.	Rod Diameter d_N f8/h9			Groove Diameter*	Groove Width	Radius	Radial Clearance S_{max}**			O-Ring Cross-Section
	Standard Application	Light Application	Heavy Duty Application	D_1 H9	L_1 +.008	r_1 max	10 MPa 1500 psi	20 MPa 3000 psi	40 MPa 5800 psi	d_2
RT10	-	.313 - .624	-	d_N +.193	.087	.020	.020	.012	.008	.070
RT11	.313 - .624	.625 - 1.624	-	d_N +.287	.126	.020	.024	.016	.008	.103
RT12	.625 - 1.624	1.625 - 3.249	.313 - .624	d_N +.421	.165	.025	.024	.016	.008	.139
RT13	1.625 - 7.749	3.250 - 5.374	.625 - 1.624	d_N +.594	.248	.030	.031	.020	.012	.210
RT14	7.750 - 9.999	5.375 - 12.999	1.625 - 3.249	d_N +.807	.319	.035	.031	.020	.012	.275
RT15	10.000 - 20.000	13.000 - 26.000	3.250 - 5.375	d_N +.945	.319	.035	.035	.020	.016	.275

* Installation with groove dimensions to ISO 7425-2 is possible.
** At pressures >**40 MPa (5,800 psi)** use diameter tolerance H8/f8 (bore/rod) in the area of the seal.

ORDERING EXAMPLE

Turcon® Glyd Ring® T, complete with O-Ring, standard application, Series RT14 (from Table 23)

Rod diameter:	d_N = 8.000 inches
TSS Part No.:	RT1408000 (from Table 24)

Select the material from Table 22. The corresponding code numbers are appended to the TSS Part No. (from Table 24). Together these form the TSS Article No. The TSS Article No. for all intermediate sizes not shown in Table 24 can be determined following the example below.

TSS Article No. RT14 08000 - T46 N

- TSS Series No. — RT14
- Rod Diameter x 1000**** — 08000
- Quality Index (Standard) — -
- Material Code (Seal Ring) — T46
- Material code (O-Ring) — N

**** For diameters ≥20 inches please consult your Trelleborg Sealing Solutions sales office for special TSS Article No.

NOTE

Turned - other diameters also available, no tool costs.

Table 24: Installation dimensions / TSS Part No.

Rod Diameter	Groove Diameter	Groove Width	TSS Part No.
d_N f8/h9	D_1 H9	L_1 +.008	
.500	.693	.087	RT1000500
.563	.756	.087	RT1000563
.625	.912	.126	RT1100625
.688	.975	.126	RT1100688
.750	**1.037**	**.126**	**RT1100750**
.813	1.100	.126	RT1100813
.875	1.162	.126	RT1100875
.938	1.225	.126	RT1100938
1.000	**1.287**	**.126**	**RT1101000**
1.063	1.350	.126	RT1101063
1.125	1.412	.126	RT1101125
1.188	1.475	.126	RT1101188
1.250	**1.537**	**.126**	**RT1101250**
1.313	1.600	.126	RT1101313
1.375	1.662	.126	RT1101375
1.438	1.725	.126	RT1101438
1.500	**1.787**	**.126**	**RT1101500**
1.563	1.850	.126	RT1101563
1.625	2.046	.165	RT1201625
1.688	2.109	.165	RT1201688
1.750	**2.171**	**.165**	**RT1201750**
1.813	2.234	.165	RT1201813
1.875	2.296	.165	RT1201875
1.938	2.359	.165	RT1201938
2.000	**2.421**	**.165**	**RT1202000**
2.125	2.546	.165	RT1202125
2.250	**2.671**	**.165**	**RT1202250**
2.375	2.796	.165	RT1202375
2.500	**2.921**	**.165**	**RT1202500**
2.625	3.046	.165	RT1202625
2.750	**3.171**	**.165**	**RT1202750**
2.875	3.296	.165	RT1202875
3.000	**3.421**	**.165**	**RT1203000**
3.125	3.546	.165	RT1203125
3.250	**3.844**	**.248**	**RT1303250**
3.375	3.969	.248	RT1303375
3.500	**4.094**	**.248**	**RT1303500**
3.625	4.219	.248	RT1303625
3.750	**4.344**	**.248**	**RT1303750**
3.875	4.469	.248	RT1303875

Rod Diameter	Groove Diameter	Groove Width	TSS Part No.
d_N f8/h9	D_1 H9	L_1 +.008	
4.000	**4.594**	**.248**	**RT1304000**
4.125	4.719	.248	RT1304125
4.250	**4.844**	**.248**	**RT1304250**
4.375	4.969	.248	RT1304375
4.500	**5.094**	**.248**	**RT1304500**
4.625	5.219	.248	RT1304625
4.750	**5.344**	**.248**	**RT1304750**
4.875	5.469	.248	RT1304875
5.000	**5.594**	**.248**	**RT1305000**
5.125	5.719	.248	RT1305125
5.250	5.844	.248	RT1305250
5.375	6.182	.319	RT1405375
5.500	**6.307**	**.319**	**RT1405500**
5.625	6.432	.319	RT1405625
5.750	6.557	.319	RT1405750
6.000	**6.807**	**.319**	**RT1406000**
6.250	7.057	.319	RT1406250
6.500	7.307	.319	RT1406500
6.750	7.557	.319	RT1406750
7.000	**7.807**	**.319**	**RT1407000**
7.250	8.057	.319	RT1407250
7.500	8.307	.319	RT1407500
7.750	8.557	.319	RT1407750
8.000	**8.807**	**.319**	**RT1408000**
8.250	9.057	.319	RT1408250
8.500	9.307	.319	RT1408500
8.750	9.557	.319	RT1408750
9.000	**9.807**	**.319**	**RT1409000**
9.250	10.057	.319	RT1409250
9.500	10.307	.319	RT1409500
9.750	10.557	.319	RT1409750
10.000	**10.807**	**.319**	**RT1410000**
10.500	11.307	.319	RT1410500
11.000	11.807	.319	RT1411000
11.500	12.307	.319	RT1411500
12.000	**12.945**	**.319**	**RT1512000**
12.500	13.445	.319	RT1512500
13.000	13.945	.319	RT1513000
13.500	14.445	.319	RT1513500
14.000	**14.945**	**.319**	**RT1514000**

Rod Diameter	Groove Diameter	Groove Width	TSS Part No.
d_N f8/h9	D_1 H9	L_1 +.008	
14.500	15.445	.319	RT1514500
15.000	15.945	.319	RT1515000
15.500	16.445	.319	RT1515500
16.000	**16.945**	**.319**	**RT1516000**
16.500	17.445	.319	RT1516500
17.000	17.945	.319	RT1517000
17.500	18.445	.319	RT1517500
18.000	**18.945**	**.319**	**RT1518000**
18.500	19.445	.319	RT1518500
19.000	19.945	.319	RT1519000
19.500	20.445	.319	RT1519500
20.000	**20.945**	**.319**	**RT1520000**

The sizes listed in **bold** font are preferred sizes (more likely to be available for immediate shipment).

Double-Acting

O-Ring-Energized Turcon® Slipper Seal

Material:
Turcon® , Zurcon® and Elastomer

Turcon® Glyd Ring®

Description

Successfully used for decades, the Turcon® Glyd Ring® is a very effective and reliable low friction seal. It is particularly suitable as a rod seal in both high and low pressure systems.

The double acting Turcon® Glyd Ring® is a combination of a Turcon® based slipper seal and an energizing O-Ring. It is produced with an interference fit which together with the squeeze of the O-Ring ensures a good sealing effect even at low pressure. At higher system pressures, the O-Ring is energized by the fluid, pushing the Turcon® Glyd Ring® against the sealing face with increased force.

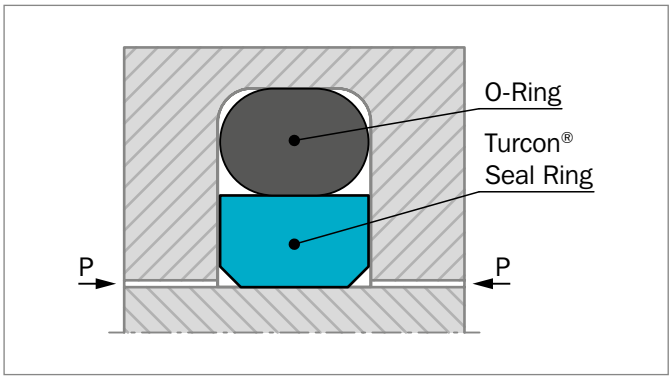

Figure 41: Turcon® Glyd Ring®

The geometry of the Turcon® Glyd Ring® ensures a good static sealing and allows the lubricating hydrodynamic oil film to build under the seal in reciprocating applications.

NOTCHES

To assure that a rapid energizing of the seal takes place at sudden changes of pressure and direction of motion, the seal can be delivered with radial notches on both sides.

For ordering of Glyd Ring® with notches, see ordering example for this section.

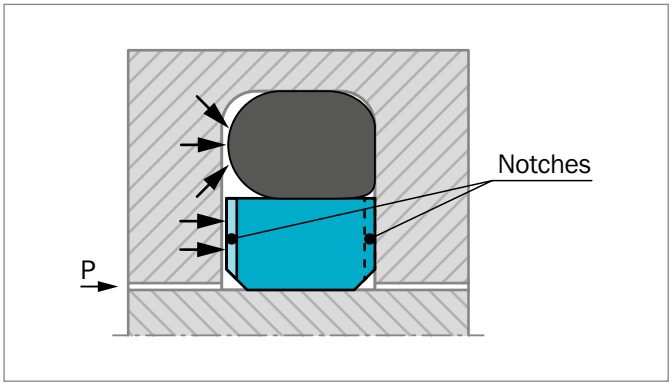

Figure 42: Turcon® Glyd Ring®

ADVANTAGES

- No stick-slip effect when starting for smooth operation
- Minimum static and dynamic friction coefficient for minimum energy loss and operating temperature
- Suitable for non lubricating fluids depending on seal material for optimum design flexibility
- High wear resistance ensures long service life
- No adhesive effect to the mating surface during long periods of inactivity or storage
- Suitable for most hydraulic fluids in relation to most modern hardware materials and surface finishes depending on material selected.
- Suitable for new environmentally safe hydraulic fluids
- Available for all rod diameters up to 102 inches (2,600mm)

APPLICATIONS EXAMPLES

Over several decades the Turcon® Glyd Ring® has been successfully implemented in many applications as double or single-acting rod seals of hydraulic components such as:

- Special cylinders
- Pumps and valves
- Machine tools
- Servo equipment

TECHNICAL DATA

Operating conditions:
The Turcon® Glyd Ring® is recommended for reciprocating (with a length of stroke at least twice the groove width) and helical movements.

Pressure:	Up to 8,700 psi (60 MPa)
Velocity:	Up to 50 ft/s (15 m/s)
Frequency:	Up to 5 Hz.
Temperature:	-49 °F to +392 °F (-45 °C to +200 °C) (depending on O-Ring material)
Media:	Mineral oil-based hydraulic fluids, barely flammable hydraulic fluids, environmentally safe hydraulic fluids (biological degradable oils), water, air and others, depending on the O-Ring material compatibility.
Clearance:	The maximum permissible radial clearance S_{max} is shown in the Table 26, as a function of the operating pressure and functional diameter.

IMPORTANT NOTE

The above data are maximum values and cannot be used at the same time. e.g. the maximum operating speed depends on material type, pressure, temperature and gap value. Temperature range also dependent on medium.

MATERIALS

Standard Application:
For hydraulic components with reciprocating movement in mineral oils or medium with good lubricating performance.

Turcon® Seal: Turcon® T46

Energizer: NBR, 70 Shore A N
FKM, 70 Shore A V
depending on the temperature

Set code: T46N or T46V

Special Application:
Short stroke movements, non-lubricating fluids or pneumatic applications require self-lubricating sealing materials. Therefore we recommend:

Turcon® Seal: Turcon® T29

Energizer: NBR, 70 Shore A N
FKM, 70 Shore A V
depending on the temperature

Set code: T29N or T29V

If low friction coefficient is required, we recommend:

Turcon® Seal: Turcon® T05

Energizer: NBR, 70 Shore A N
FKM, 70 Shore A V
depending on the temperature
For special requirements, other elastomers are available on request.

Set code: T05N or T05V

If rougher surface finish must be sealed, we recommend:

Zurcon® seal: Zurcon® Z53

Energizer: NBR, 70 Shore A N

Set code: Z53N

Table 25: Turcon® and Zurcon® Materials for Glyd Ring®

Material, Applications, Properties	Code	O-Ring Material Shore A	Code	O-Ring Operating Temp.* °F	Mating Surface Material	PSI Max.
Turcon® M12 First material choice for seals in linear motion Overall improved properties For new constructions and updating For all commonly applied hydraulic fluids including fluids with low lubrication performance Lowest friction and best sliding properties Lowest wear on seals Improved absorption of abrassive contaminants Low wear or abrasion of counter surface BAM tested Mineral fiber and additives filled Color: Dark gray	M12	NBR-70	N	-22 to +212	Steel Steel hardened Steel chrome plated (rod) Steel plated (rod) Cast iron Stainless steel Titanium	7,250
		NBR-70 Low temp.	T	-49 to +176		
		FKM-70	V	+14 to +392		
Turcon® T46 Standard material for hydraulics, high compressive strength, good sliding and wear properties, good extrusion resistance BAM tested Bronze filled Color: Grayish to dark brown	T46	NBR-70	N	-22 to +212	Steel hardened Steel chrome plated Cast iron	7,250
		NBR-70 Low temp.	T	-49 to +176		
		FKM-70	V	+14 to +392		
Turcon® T08 Very high compressive strength, very good extrusion resistance High bronze filled Color: Light to dark brown	T08	NBR-70	N	-22 to +212	Steel hardened Steel chrome plated Cast iron	8,700
		NBR-70 Low temp.	T	-49 to +176		
		FKM-70	V	+14 to +392		
Turcon® T40 For all lubricating and non-lubricating hydraulic fluids, hydraulic oils without zinc, water hydraulic, soft mating surfaces Surface texture not suitable for gases Carbon fiber filled Color: Gray	T40	NBR-70	N	-22 to +212	Steel Steel chrome plated Cast iron Stainless steel Aluminum Bronze Alloys	3,625
		NBR-70 Low temp.	T	-49 to +176		
		FKM-70	V	+14 to +392		
		EPDM-70	E**	-49 to +293		
Turcon® T29 For all lubricating and non-lubricating hydraulic fluids, hydraulic oils without zinc, soft mating surfaces, good extrusion resistance Surface texture not suitable for gases High carbon fiber filled Color: Gray	T29	NBR-70	N	-22 to +212	Steel Steel chrome plated Cast iron Stainless steel Aluminium Bronze	4,350
		NBR-70 Low temp.	T	-49 to +176		
		FKM-70	V	+14 to +392		
		EPDM-70	E**	-49 to +293		

Table continues on next page

Material, Applications, Properties	Code	O-Ring Material Shore A	Code	O-Ring Operating Temp.* °F	Mating Surface Material	PSI Max.
Turcon® T05 For all lubricating hydraulic fluids, hard mating surfaces, very good slide properties, low friction. Color: Turquoise	T05	NBR-70	N	-22 to +212	Steel hardened Steel chrome plated	2,900
		NBR-70 Low temp.	T	-49 to +176		
		FKM-70	V	+14 to +392		
Turcon® T42 For all lubricating and non-lubricating hydraulic fluids, good chemical resistance, good dielectric properties Glass fiber filled + MoS_2 Color: Gray to blue	T42	NBR-70	N	-22 to +212	Steel hardened Steel chrome plated Cast iron	5,800
		NBR-70 Low temp.	T	-49 to +176		
		FKM-70	V	+14 to +392		
Turcon® T19 For all lubricating fluids and hydraulic oils without zinc, high sealing efficiency, good sliding and wear properties, mild to counter surface Mineral fiber filled Color: Dark green-gray	T19	NBR-70	N	-22 to +212	Steel Steel hardened Steel chrome plated Cast iron Stainless steel	5,000
		NBR-70 Low temp.	T	-49 to +176		
		FKM-70	V	+14 to +392		
Zurcon® Z53*** For lubricating hydraulic fluids, high abrasion resistance, high extrusion resistance, limited chemical resistance Color: Yellow to light-brown	Z53	NBR-70	N	-22 to +212	Steel Steel chrome plated Cast iron Ceramic coating Stainless steel	8,700
		NBR-70 Low temp.	T	-49 to +176		
Zurcon® Z80 For lubricating and non-lubricating hydraulic fluids, high abrasion resistance, very good chemical resistance, limited temp. resistance Ultra high molecular weight polyethylene Color: White to off-white	Z80	NBR-70	N	-22 to +176	Steel Steel chrome plated Stainless steel Aluminum Bronze Ceramic coating	5,075
		NBR-70 Low temp.	T	-49 to +176		

* The O-Ring operation temperature is only valid in mineral hydraulic oil.

** Material not suitable for mineral oils.

*** max. Ø 102 inches (2,600mm).

BAM: Tested by "Bundesanstalt Materialprüfung, Germany".

Highlighted materials are standard.

Installation Recommendation (Inch Rod Series)

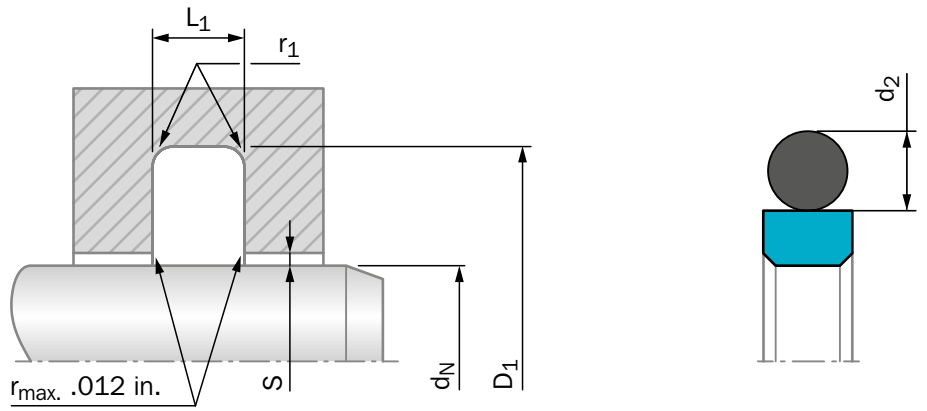

Figure 43: Installation drawing

Table 26: Installation recommendation

TSS Series No.	Rod Diameter d_N f8/h9			Groove Diameter*	Groove Width	Radius	Radial Clearance S_{max}**			O-Ring Cross-Section
	Standard Application	Light Application	Heavy Duty Application	D_1 H9	L_1 +.008	$r_{1\,max}$	10 MPa 1500 psi	20 MPa 3000 psi	40 MPa 5800 psi	d_2
RG00	.313 - .624	.625 - 1.624	-	d_N +.193	.087	.015	.020	.012	.008	.070
RG01	.625 - 1.624	1.625 - 3.249	-	d_N +.287	.126	.025	.024	.016	.008	.103
RG02	1.625 - 3.249	3.250 - 5.374	.625 - 1.624	d_N +.421	.165	.025	.024	.016	.008	.139
RG03	3.250 - 5.374	5.375 -12.999	1.625 - 3.249	d_N +.594	.248	.035	.031	.020	.012	.210
RG04	5.375 - 12.999	13.000 - 26.000	3.250 - 5.374	d_N +.807	.319	.035	.031	.020	.012	.275
RG05	13.000 - 26.000	-	5.375 - 13.000	d_N +.945	.319	.035	.035	.020	.016	.275

* Installation with groove dimensions to ISO 7425/2 is possible.
** At pressures **>40 MPa (5,800 psi)** use diameter tolerance H8/f8 (bore/rod) in the area of the seal or consult Trelleborg Sealing Solutions for alternative material or profiles.

ORDERING EXAMPLE

Turcon® Glyd Ring®, complete with O-Ring, standard application, Series RG02 (from Table 26)

Rod diameter:	d_N = 1.625 inches
TSS Part No.:	RG0201625 (from Table 27)

Select the material from Table 25. The corresponding code numbers are appended to the TSS Part No. (from Table 27). Together these form the TSS Article No. The TSS Article No. for all intermediate sizes not shown in Table 27 can be determined following the example opposite.

To order parts with notches substitute “N“ for “0“ in 3rd digit.

TSS Article No. RG 0 2 01625 - T46 N

- TSS Series No. — RG
- 0=std, N=with notches — 0
- Cross Section Size — 2
- Rod Diameter x 1000**** — 01625
- Quality Index (Standard) — -
- Material Code (Seal Ring) — T46
- Material Code (O-Ring) — N

**** For diameters d_N ≥20 inches please consult your Trelleborg Sealing Solutions sales office for special TSS Article No.

NOTE

Turned - other diameters also available, no tool costs.

Table 27: Installation dimensions / TSS Part No.

Rod Diameter	Groove Diameter	Groove Width	TSS Part No.
d_N f8/h9	D_1 H9	L_1 +.008	
.500	.693	.087	RG0000500
.563	.756	.087	RG0000563
.625	.912	.126	RG0100625
.688	.975	.126	RG0100688
.750	**1.037**	**.126**	**RG0100750**
.813	1.100	.126	RG0100813
.875	1.162	.126	RG0100875
.938	1.225	.126	RG0100938
1.000	**1.287**	**.126**	**RG0101000**
1.063	1.350	.126	RG0101063
1.125	1.412	.126	RG0101125
1.188	1.475	.126	RG0101188
1.250	**1.537**	**.126**	**RG0101250**
1.313	1.600	.126	RG0101313
1.375	1.662	.126	RG0101375
1.438	1.725	.126	RG0101438
1.500	**1.787**	**.126**	**RG0101500**
1.563	1.850	.126	RG0101563
1.625	2.046	.165	RG0201625
1.688	2.109	.165	RG0201688
1.750	**2.171**	**.165**	**RG0201750**
1.813	2.234	.165	RG0201813
1.875	2.296	.165	RG0201875
1.938	2.359	.165	RG0201938
2.000	**2.421**	**.165**	**RG0202000**
2.125	2.546	.165	RG0202125
2.250	**2.671**	**.165**	**RG0202250**
2.375	2.796	.165	RG0202375
2.500	**2.921**	**.165**	**RG0202500**
2.625	3.046	.165	RG0202625
2.750	**3.171**	**.165**	**RG0202750**
2.875	3.296	.165	RG0202875
3.000	**3.421**	**.165**	**RG0203000**
3.125	3.546	.165	RG0203125
3.250	**3.844**	**.248**	**RG0303250**
3.375	3.969	.248	RG0303375
3.500	**4.094**	**.248**	**RG0303500**
3.625	4.219	.248	RG0303625
3.750	**4.344**	**.248**	**RG0303750**
3.875	4.469	.248	RG0303875

Rod Diameter	Groove Diameter	Groove Width	TSS Part No.
d_N f8/h9	D_1 H9	L_1 +.008	
4.000	**4.594**	**.248**	**RG0304000**
4.125	4.719	.248	RG0304125
4.250	**4.844**	**.248**	**RG0304250**
4.375	4.969	.248	RG0304375
4.500	**5.094**	**.248**	**RG0304500**
4.625	5.219	.248	RG0304625
4.750	**5.344**	**.248**	**RG0304750**
4.875	5.469	.248	RG0304875
5.000	**5.594**	**.248**	**RG0305000**
5.125	5.719	.248	RG0305125
5.250	5.844	.248	RG0305250
5.375	6.182	.319	RG0405375
5.500	**6.307**	**.319**	**RG0405500**
5.625	6.432	.319	RG0405625
5.750	6.557	.319	RG0405750
6.000	**6.807**	**.319**	**RG0406000**
6.250	7.057	.319	RG0406250
6.500	7.307	.319	RG0406500
6.750	7.557	.319	RG0406750
7.000	**7.807**	**.319**	**RG0407000**
7.250	8.057	.319	RG0407250
7.500	8.307	.319	RG0407500
7.750	8.557	.319	RG0407750
8.000	**8.807**	**.319**	**RG0408000**
8.250	9.057	.319	RG0408250
8.500	9.307	.319	RG0408500
8.750	9.557	.319	RG0408750
9.000	**9.807**	**.319**	**RG0409000**
9.250	10.057	.319	RG0409250
9.500	10.307	.319	RG0409500
9.750	10.557	.319	RG0409750
10.000	**10.807**	**.319**	**RG0410000**
10.500	11.307	.319	RG0410500
11.000	11.807	.319	RG0411000
11.500	12.307	.319	RG0411500
12.000	**12.945**	**.319**	**RG0512000**
12.500	13.445	.319	RG0512500
13.000	13.945	.319	RG0513000
13.500	14.445	.319	RG0513500
14.000	**14.945**	**.319**	**RG0514000**

Rod Diameter	Groove Diameter	Groove Width	TSS Part No.
d_N f8/h9	D_1 H9	L_1 +.008	
14.500	15.445	.319	RG0514500
15.000	15.945	.319	RG0515000
15.500	16.445	.319	RG0515500
16.000	**16.945**	**.319**	**RG0516000**
16.500	17.445	.319	RG0516500
17.000	17.945	.319	RG0517000
17.500	18.445	.319	RG0517500
18.000	**18.945**	**.319**	**RG0518000**
18.500	19.445	.319	RG0518500
19.000	19.945	.319	RG0519000
19.500	20.445	.319	RG0519500
20.000	**20.945**	**.319**	**RG0520000**

The sizes listed in **bold** font are preferred sizes (more likely to be available for immediate shipment).

Double-Acting

O-Ring-Energized Turcon® Slipper Seal

Material:
Turcon® , Zurcon® and Elastomer

Turcon® Glyd Ring® C

Description

The Turcon® Glyd Ring® C is a very effective and reliable low frictional seal. It is suitable as a double acting rod seal in both low and medium pressure systems.

The Turcon® Glyd Ring® C is a combination of a Turcon® based slipper seal and an energizing O-Ring. It is produced with an interference fit, which, together with the squeeze of the O-Ring, ensures a good sealing effect even at low pressure. At higher system pressures, the O-Ring is energized by the fluid, pushing the Turcon® Glyd Ring® C against the sealing face with increased force.

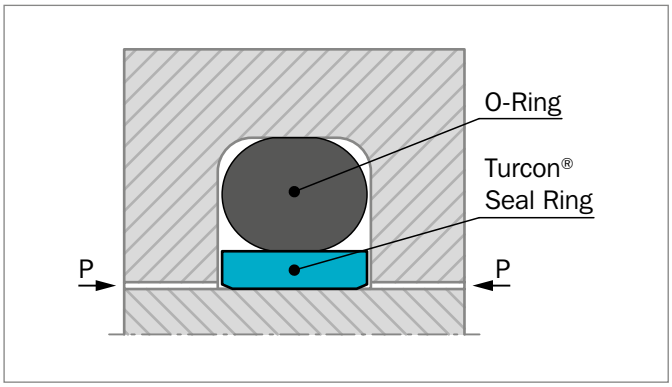

Figure 44: Turcon® Glyd Ring® C

The geometry of the Turcon® Glyd Ring® C ensures effective static sealing and allows the lubricating hydrodynamic fluid film to build under the seal in reciprocating applicatios.

NOTCHES

To assure that a rapid energizing of the seal takes place at sudden changes of pressure and direction of motion, the seal can be delivered with radial “notches“ on both sides.

Ordering of Glyd Ring® C with “notches“ see page 105.

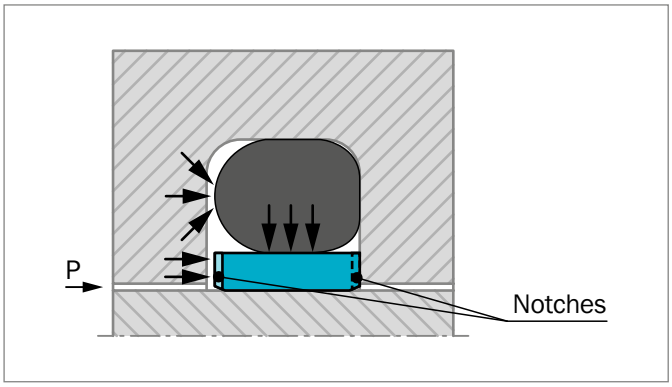

Figure 45: Turcon® Glyd Ring® C with notches on both sides

ADVANTAGES

- No stick-slip effect when starting for smooth operation
- Minimum static and dynamic friction coefficient for a minimum energy loss and operating temperature
- Suitable for non lubricating fluids depending on seal material for optimum design flexibility
- High wear resistance ensures long service life
- No adhesive effect to the mating surface during long period of inactivity or storage
- Suitable for most hydraulic fluids in relation with most modern hardware materials and surface finish depending on material selected
- Suitable for new environmentally safe hydraulic fluids

APPLICATIONS EXAMPLES

Over several decades the Turcon® Glyd Ring® C has been successfully implemented in countless applications as double acting Rod seals of hydraulic components such as:

- Machine tools
- Robotics
- Handling machinery
- Manipulators
- Valves for hydraulic & pneumatic circuits
- Fittings
- Testing machinery
- Hydraulic power steering
- Brake systems
- Brake boosters
- Low temperature hydraulics
- Chemical processing equipment
- Filling machines

TECHNICAL DATA

Operating conditions:
The Turcon® Glyd Ring® C is recommended for reciprocating movements (with a length of stroke at least twice the groove width).

Pressure:	Up to 7,250 psi (50 MPa)
Velocity:	Up to 50 ft/s (15 m/s)
Frequency:	Up to 5 Hz.
Temperature:	-49 °F to +392 °F (-45 °C to +200 °C) (depending on O-Ring material)
Media:	Mineral oil based hydraulic fluids, barely flammable hydraulic fluids, environmentally safe hydraulic fluids (biological degradable oils), water, air and others. Depending on the O-Ring material compatibility.
Clearance:	The maximum permissible radial clearance S_{max} is shown in the Table 29, as a function of the operating pressure and functional diameter.

IMPORTANT NOTE

The above data are maximum values and cannot be used at the same time. e.g. the maximum operating speed depends on material type, pressure, temperature and gap value. Temperature range also dependent on medium.

MATERIALS

Standard Application:
For hydraulic components with reciprocating movement in mineral oils or medium with good lubricating performance.

Seal Ring: Turcon® T46

Energizer: NBR, 70 Shore A N
FKM, 70 Shore A V
depending on the temperature

Set code: T46N or T46V

Special Application:
For short stroke movements, non-lubricating fluids or applications requiring self-lubricating sealing materials we recommend:

Seal Ring: Turcon® T40

Energizer: NBR, 70 Shore A N
FKM, 70 Shore A V
depending on the temperature

Set code: T40N or T40V

If low friction coefficient is required, we recommend:

Seal Ring: Turcon® T05

Energizer: NBR, 70 Shore A N

Set code: T05N

If exposure to water is required, we recommend:

Seal Ring: Zurcon® Z80

Energizer: NBR, 70 Shore A N

Set code: Z80N

Table 28: Turcon® Glyd Ring® C

Material, Applications, Properties	Code	O-Ring Material Shore A	Code	O-Ring Operating Temp.* °F	Mating Surface Material	PSI Max.
Turcon® M12 First material choice for seals in linear motion Overall improved properties For new constructions and updating For all commonly applied hydraulic fluids including fluids with low lubrication performance Lowest friction and best sliding properties Lowest wear on seals Improved absorption of abrassive contaminants Low wear or abrasion of counter surface BAM tested Mineral fiber and additives filled Color: Dark gray	M12	NBR-70	N	-22 to +212	Steel Steel hardened Steel chrome plated (rod) Steel plated (rod) Cast iron Stainless steel Titanium	7,250
		NBR-70 Low temp.	T	-49 to +176		
		FKM-70	V	+14 to +392		
Turcon® T46 Standard material for hydraulics, high compressive strength, good sliding and wear properties, good extrusion resistance BAM tested Bronze filled Color: Grayish to dark brown	T46	NBR-70	N	-22 to +212	Steel hardened Steel chrome plated Cast iron	7,250
		NBR-70 Low temp	T	-49 to +176		
		FKM-70	V	+14 to +392		
Turcon® T24 For all lubricating and non-lubricating hydraulic fluids,soft mating surfaces Carbon filled Color: Black	T24	NBR-70	N	-22 to +212	Steel Steel hardened Cast iron Stainless steel Aluminum Bronze	3,625
		NBR-70 Low temp.	T	-49 to +176		
		FKM-70	V	+14 to +392		
		EPDM-70	E**	-49 to +293		
Turcon® T05 For all lubricating hydraulic fluids, hard mating surfaces, very good sliding properties, low friction Color: Turquoise	T05	NBR-70	N	-22 to +212	Steel tubes Steel hardened	2,900
		NBR-70 Low temp.	T	-49 to +176		
		FKM-70	V	+14 to +392		
Turcon® T40 For all lubricating and non-lubricating hydraulic fluids,water hydraulic, soft mating surfaces.Surface texture not suitable for gases Carbon fiber filled Color: Gray	T40	NBR-70	N	-22 to +212	Steel Cast iron Stainless steel Aluminum Bronze Alloys	3,625
		NBR-70 Low temp.	T	-49 to +176		
		FKM-70	V	+14 to +392		
		EPDM-70	E**	-49 to +293		

Table continues on next page

Material, Applications, Properties	Code	O-Ring Material Shore A	Code	O-Ring Operating Temp.* °F	Mating Surface Material	PSI Max.
Zurcon® Z53 For lubricating hydraulic fluids, high abrasion resistance, high extrusion resistance, limited chemical resistance Color: Yellow to light-brown	Z53	NBR-70	N	-22 to +212	Steel Steel hardened Cast iron Ceramic coating Stainless steel	5,800
		NBR-70 Low temp.	T	-49 to +176		
Zurcon® Z80 For lubricating and non-lubricating hydraulic fluids, high abrasion resistance, very good chemical resistance, limited temperature resistance Ultra high molecular weight polyethylene Color: White to off-white	Z80	NBR-70	N	-22 to +176	Steel Stainless steel Aluminum Bronze Ceramic coating	5,800
		NBR-70 Low temp.	T	-49 to +176		

* The O-Ring Operation Temperature is only valid in mineral hydraulic oil.

** Material not suitable for mineral oils.

BAM: Tested by "Bundesanstalt Materialprüfung, Germany"

Highlighted materials are standard.

Installation Recommendation (Inch Rod Series)

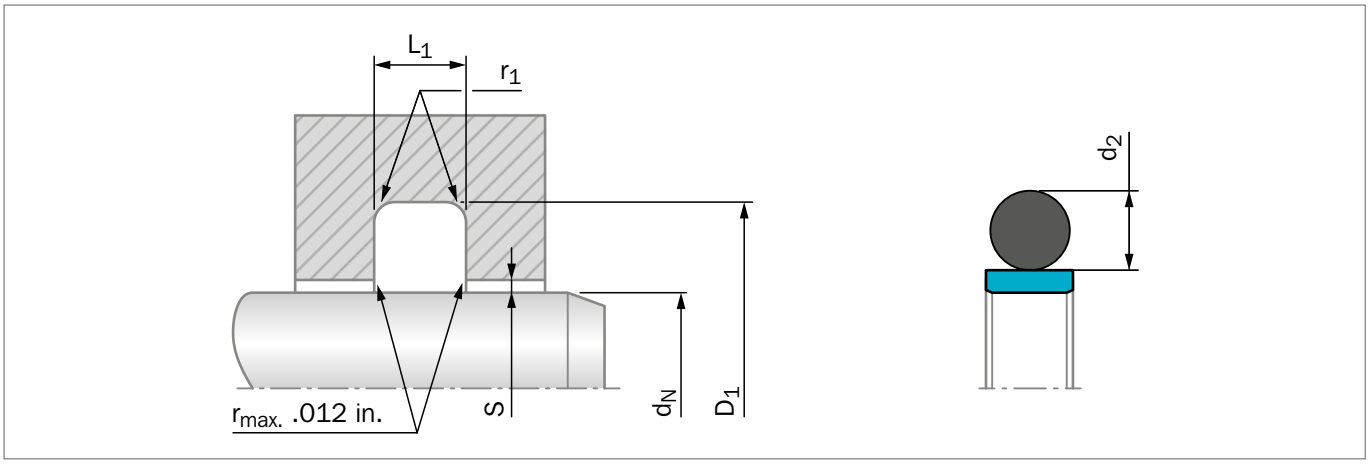

Figure 46: Installation drawing

Table 29: Installation recommendation

Dash No.	Rod Diameter d_N f8/h9		Groove Diameter	Groove Width	Radius	Radial Clearance S_{max}	O-Ring Cross-Section
	Standard Application	Light Application	D1 H9	L1 +.008	$r_{1\ max}$	20 MPa 3000 psi	d_2
006 - 009	.125 - .219	-	d_N +.143	.079	.020	.002	.070
010 - 027	.250 - .312	.375 - 1.312	d_N +.172	.079	.020	.002	.070
110 - 148	.375 - .687	.750 - 2.750	d_N +.236	.112	.020	.002	.103
210 - 221	.750 - 1.437	-	d_N +.300	.149	.030	.003	.139
222 - 247	-	1.500 - 4.625	d_N +.363	.149	.030	.003	.139
325 - 348	1.500 - 4.375	-	d_N +.491	.221	.050	.003	.210
425 - 436	4.500 - 5.875	-	d_N +.593	.297	.060	.004	.275
437 - 444	6.000 - 7.750	-	d_N +.718	.297	.060	.004	.275
445 - 459	8.000 - 15.000	-	d_N +.968	.297	.060	.004	.275

ORDERING EXAMPLE

Turcon® Glyd Ring® C, complete with O-Ring, standard application, Series RG46 (from Table 29)

Dash No.:	231
TSS Article No.:	RG460B231 (from Table 30)

The corresponding code numbers are appended to the TSS Part No. (from Table 30). Together they form the TSS Article No. All intermediate sizes not shown in Table 30 will have special TSS Article No.

TSS Article No. RG46 0 B 231 - T46 N

- TSS Series No.
- 0=std, N=with notches
- Groove Standard
- Dash Size
- Quality Index (Standard)
- Material Code (Seal Ring)
- Material Code (O-Ring)

NOTE

Turned - other diameters also available, no tool costs.
Dash sizes represent rod sizes and groove dimensions are per TSS specifications.

Table 30: Installation dimensions / TSS Part No.

Rod Diameter	Groove Diameter	Groove Width	TSS Part No.
d_N f8/h9	D_1 H9	L_1 +.008	
.250	**.422**	**.079**	**RG460B010**
.313	.485	.079	RG460B011
.375	.547	.079	RG460B012
.438	.610	.079	RG460B013
.500	**.672**	**.079**	**RG460B014**
.563	.735	.079	RG460B015
.625	.797	.079	RG460B016
.688	.860	.079	RG460B017
.750	**.922**	**.079**	**RG460B018**
.813	.985	.079	RG460B019
.875	1.047	.079	RG460B020
.938	1.110	.079	RG460B021
1.000	**1.236**	**.112**	**RG460B120**
1.063	1.299	.112	RG460B121
1.125	1.361	.112	RG460B122
1.188	1.424	.112	RG460B123
1.250	**1.486**	**.112**	**RG460B124**
1.313	1.549	.112	RG460B125
1.375	1.611	.112	RG460B126
1.438	1.674	.112	RG460B127
1.500	**1.736**	**.112**	**RG460B128**
1.563	1.799	.112	RG460B129
1.625	1.861	.112	RG460B130
1.688	1.924	.112	RG460B131
1.750	**1.986**	**.112**	**RG460B132**
1.813	2.049	.112	RG460B133
1.875	2.111	.112	RG460B134
1.938	2.174	.112	RG460B135
2.000	**2.236**	**.112**	**RG460B136**
2.063	2.299	.112	RG460B137
2.125	2.361	.112	RG460B138
2.188	2.424	.112	RG460B139
2.250	**2.486**	**.112**	**RG460B140**
2.313	2.549	.112	RG460B141
2.375	2.611	.112	RG460B142
2.438	2.674	.112	RG460B143
2.500	**2.736**	**.112**	**RG460B144**
2.625	2.988	.149	RG460B231
2.750	3.113	.149	RG460B232
2.875	3.238	.149	RG460B233
3.000	**3.363**	**.149**	**RG460B234**
3.125	3.488	.149	RG460B235
3.250	3.613	.149	RG460B236
3.375	3.738	.149	RG460B237
3.500	**3.991**	**.221**	**RG460B341**
3.625	4.116	.221	RG460B342
3.750	4.241	.221	RG460B343
3.875	4.366	.221	RG460B344
4.000	**4.491**	**.221**	**RG460B345**
4.125	4.616	.221	RG460B346
4.250	4.741	.221	RG460B347
4.375	4.866	.221	RG460B348
4.500	**5.093**	**.297**	**RG460B425**
4.625	5.218	.297	RG460B426
4.750	5.343	.297	RG460B427
4.875	5.468	.297	RG460B428
5.000	**5.593**	**.297**	**RG460B429**
5.125	5.718	.297	RG460B430
5.250	5.843	.297	RG460B431
5.375	5.968	.297	RG460B432
5.500	**6.093**	**.297**	**RG460B433**
5.625	6.218	.297	RG460B434
5.750	6.343	.297	RG460B435
5.875	6.468	.297	RG460B436
6.000	**6.718**	**.297**	**RG460B437**
6.250	6.968	.297	RG460B438
6.500	7.218	.297	RG460B439
6.750	7.468	.297	RG460B440
7.000	**7.718**	**.297**	**RG460B441**
7.250	7.968	.297	RG460B442
7.500	8.218	.297	RG460B443
7.750	8.468	.297	RG460B444
8.000	**8.968**	**.297**	**RG460B445**
8.500	9.468	.297	RG460B446
9.000	9.968	.297	RG460B447
9.500	10.468	.297	RG460B448
10.000	10.968	.297	RG460B449
10.500	11.468	.297	RG460B450
11.000	11.968	.297	RG460B451
11.500	12.468	.297	RG460B452
12.000	12.968	.297	RG460B453

The sizes listed in **bold** font are preferred sizes (more likely to be available for immediate shipment).

Single-Acting

O-Ring-Energized Turcon® Slipper Seal

Material:
Turcon® , Zurcon® and Elastomer

Turcon® VL Seal® *

Description

The Turcon® VL Seal® incorporates theoretical and empirical experience in a new generation seal for the 21st century.

The VL Seal® has been developed over the past few years as a new generation unidirectional Rod seal. The design has taken the latest empirical and theoretical experience into account in order to optimize performance, friction, leakage and service life. This has been achieved through in-house testing and qualified in customer applications. See test section.

The back-pumping effect allows the seal to relieve pressure trapped between tandem seals or between seals and double-acting scrapers.

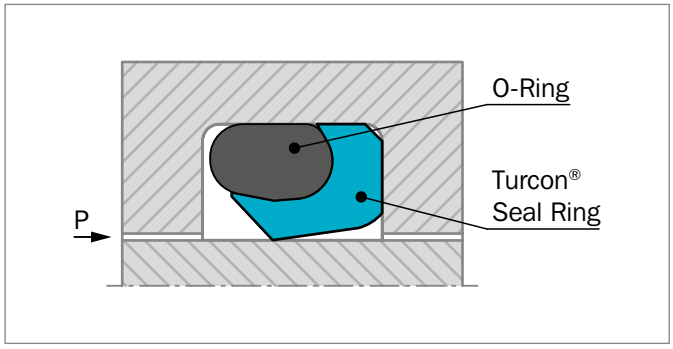

Figure 47: Turcon® VL Seal®

METHOD OF OPERATION

The sealing mechanism of the Turcon® VL Seal® (Figure 47) is based on the hydrodynamic properties of the seal. The specially formed seal edge has a steep contact pressure gradient on the high pressure side and a shallow contact pressure gradient on the low pressure side. This ensures that the fluid film adhering to the piston rod is returned to the high pressure chamber on the return stroke of the rod. This prevents the micro-fluid layer, that is carried out of the high pressure chamber when the piston rod is extended, from causing leaks.

This return delivery property prevents the build-up of interstage pressure normally associated with tandem seal configurations (Figure 48). Interstage pressure depends on the system pressure, speed, the stroke length and the groove design.

* Patent pending. (US Patent No. 6,497,415)

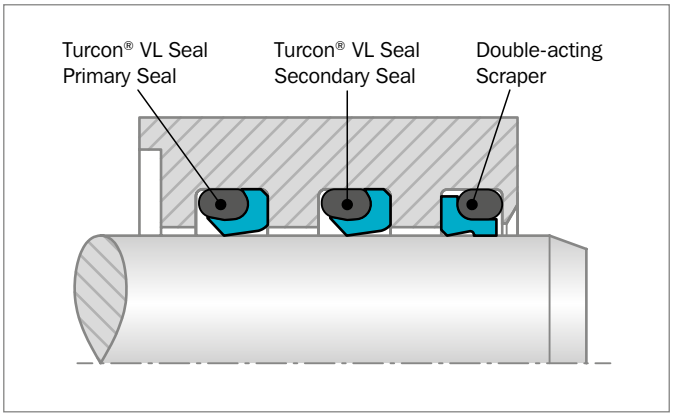

Figure 48: Pressure Distribution in Tandem Installation

ADVANTAGES

Compared with current rod seals, the following parameters have been improved:

- VL Seal® design allows gland for a reduced radial depth
- Tighter leakage control
- Lower friction: (Reduced contact area between seal and mating surface)
- Simplicity of design, using standard size O-Ring
- Featuring the Turcon® Stepseal® 2K back pumping effect
- The seal geometry prevents seal roll at low or shuffling pressure

TECHNICAL DATA

Operating pressure:	Up to 7,250 psi (50 MPa)
Velocity:	Up to 50 ft/s (15 m/s) with reciprocating movements
Temperature range:	-49 °F to +390 °F (-45 °C to +200 °C) depending on elastomer material
Clearance:	As per Table 32
Media:	Mineral oil-based hydraulic fluids, flame retardant hydraulic fluids, environmentally safe hydraulic fluids (bio-oils), Phosphate Ester, water and others, depending on the elastomer material

IMPORTANT NOTE

The above data are maximum values and cannot be used at the same time. e.g. the maximum operating speed depends on material type, pressure, temperature and gap value.
Temperature range also dependent on medium.

Table 31: Turcon® and Zurcon® Materials for Turcon® VL Seal®

Material, Applications, Properties	Code	O-Ring Material Shore A	Code	O-Ring Operating Temp.* °F	Mating Surface Material	PSI Max.
Turcon® M12 First material choice for seals in linear motion Overall improved properties For new constructions and updating For all commonly applied hydraulic fluids including fluids with low lubrication performance Lowest friction and best sliding properties Lowest wear on seals Improved absorption of abrassive contaminants Low wear or abrasion of counter surface BAM tested Mineral fiber and additives filled Color: Dark gray	M12	NBR-70	N	-22 to +212	Steel Steel hardened Steel chrome plated (rod) Steel plated (rod) Cast iron Stainless steel Titanium	7,250
		NBR-70 Low temp.	T	-49 to +176		
		FKM-70	V	+14 to +392		
Turcon® T46 Standard material for hydraulics, high compressive strength, good sliding and wear properties, good extrusion resistance BAM tested Bronze filled Color: Grayish to dark brown	T46	NBR-70	N	-22 to +212	Steel hardened Steel chrome plated Cast iron	7,250
		NBR-70 Low temp.	T	-49 to +176		
		FKM-70	V	+14 to +392		
Turcon® T29 For all lubricating and non-lubricating hydraulic fluids, hydraulic oils without zinc, soft mating surfaces, good extrusion resistance Surface texture not suitable for gases High carbon fiber filled Color: Gray	T29	NBR-70	N	-22 to +212	Steel Steel chrome plated Cast iron Stainless steel Aluminium Bronze	7,250
		NBR-70 Low temp.	T	-49 to +176		
		FKM-70	V	+14 to +392		
		EPDM-70	E**	-49 to +293		

Table continues on next page

Material, Applications, Properties	Code	O-Ring Material Shore A	Code	O-Ring Operating Temp.* °F	Mating Surface Material	PSI Max.
Turcon® T05 For all lubricating hydraulic fluids, hard mating surfaces,very good slide properties, low friction Color: Turquoise	T05	NBR-70	N	-22 to +212	Steel hardened Steel chrome plated	3,625
		NBR-70 Low temp.	T	-49 to +176		
		FKM-70	V	+14 to +392		
Zurcon® Z54*** For mineral oils based fluids Linear and slowly turning movements High abrasion resistance For counter surface with rougher surface finish Good extrusion resistance Limited chemical resistance Max. working temperature 230 °F Color: Turquoise	Z54	NBR-70	N	-22 to +212	Steel Steel chrome plated Cast iron Ceramic coating Stainless steel	3,625
		NBR-70 Low temp.	T	-49 to +176		

* The O-Ring operation temperature is only valid in mineral hydraulic oil.

** Material not suitable for mineral oils.

*** max. Ø 102 inches (2,600mm).

BAM: Tested by “Bundesanstalt Materialprüfung, Germany”.

Highlighted materials are standard.

Installation Recommendation (Inch Rod Series)

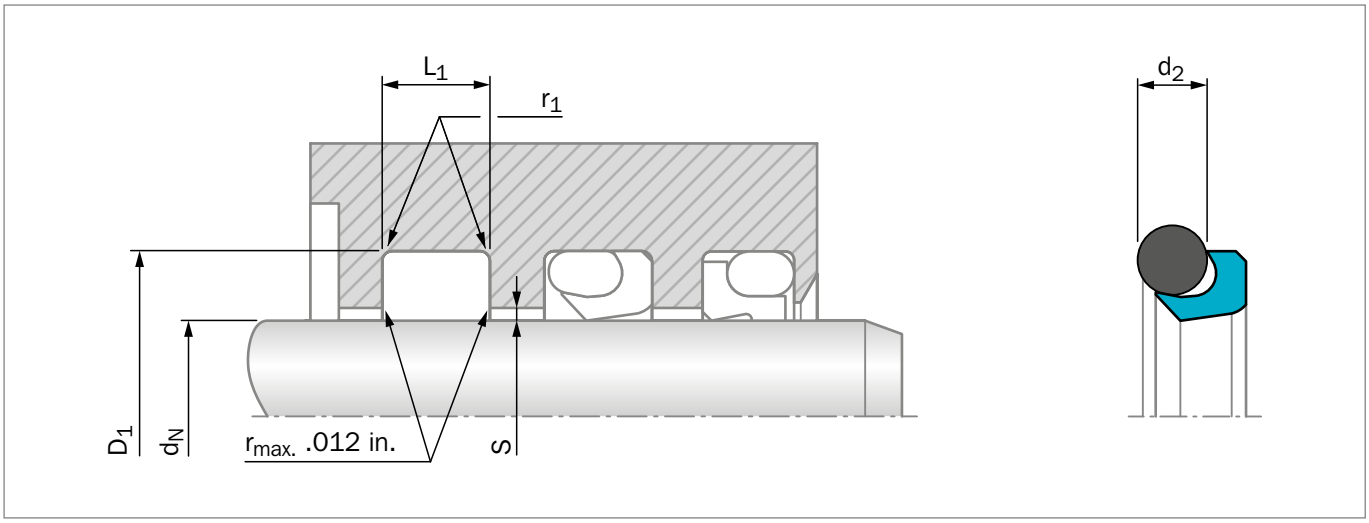

Figure 49: Installation drawing

Table 32: Installation recommendation

TSS Series No.	Rod Diameter d_N f8/h9			Groove Diameter	Groove Width	Radius	Radial Clearance S_{max}			O-ring Cross-Section
	Standard Application	Light Application	Heavy Duty Application	D_1 H9	L_1 +.008	$r_{1\ max}$	10 MPa 1500 psi	20 MPa 3000 psi	30 MPa 5800 psi	d_2
REL1	.375 - .749	.750 - 4.000	.250 - .374	d_N +.177	.142	.016	.016	.010	.006	.070
REL2	.750 - 1.499	1.500 - 8.000	.438 - .749	d_N +.244	.189	.024	.016	.010	.008	.103
REL3	1.500 - 4.749	4.750 - 16.000	.750 - 1.499	d_N +.370	.280	.032	.020	.012	.008	.139
REL4	4.750 - 15.999	16.000 - 25.000	1.375 - 4.749	d_N +.480	.374	.032	.024	.014	.010	.210
REL5	16.000 - 40.000	-	5.000 - 15.999	d_N +.626	.480	.032	.028	.020	.012	.275

The seal is designed for MIL-G5514F/AS4716 groove geometries, but higher clearances can be accommodated according to service conditions.

The seal is designed for 0 back-up ring groove width, but installation may be faciliated by the use of a 1 back-up ring groove width and filling the groove with a back-up ring, as a spacer.

Seals for 1 & 2 back-up ring groove widths can be used with solid b/u-rings (a scarfcut is only recommended for small diameters <25mm / 1 inch) to ease installation. Special back-up rings can be designed and supplied for unique application requirements.

The standard range can be installed in closed groove down to .800 inches / 20mm, 0 back-up ring. Smaller diameters down to .630 inches / 16mm can be installed for 1 or 2 back-up ring groove width. Back-up ring to be installed afterwards.

ORDERING EXAMPLE

Turcon® VL Seal® , complete with O-Ring, standard application, Series REL3 (from Table 33)

TSS Series No:	REL3
Rod diameter:	2.000 inches (50.8mm)
Material:	Turcon® T46

TSS Article No. REL3 00508 - T46 N

- TSS Series No. — REL3
- Rod Diameter x 10 — 00508
- Quality Index (Standard) — -
- Material Code (Seal Ring) — T46
- Material code (O-Ring) — N

Table 33: Installation dimensions / TSS Part No.

Rod Diameter	Groove Diameter	Groove Width	TSS Part No.
d_N f8/h9	D_1 H9	L_1 +.008	
.500	.677	.142	REL100127
.563	.740	.142	REL100143
.625	.802	.142	REL100159
.688	.865	.142	REL100175
.750	**.927**	**.142**	**REL100191**
.813	1.057	.189	REL200206
.875	1.119	.189	REL200222
.938	1.182	.189	REL200238
1.000	**1.244**	**.189**	**REL200254**
1.063	1.307	.189	REL200270
1.125	1.369	.189	REL200286
1.188	1.432	.189	REL200302
1.250	**1.494**	**.189**	**REL200318**
1.313	1.557	.189	REL200333
1.375	1.619	.189	REL200349
1.438	1.682	.189	REL200365
1.500	**1.744**	**.189**	**REL200381**
1.563	1.807	.189	REL200397
1.625	1.995	.280	REL300413
1.688	2.058	.280	REL300429
1.750	**2.120**	**.280**	**REL300445**
1.813	2.183	.280	REL300460
1.875	2.245	.280	REL300476
1.938	2.308	.280	REL300492
2.000	**2.370**	**.280**	**REL300508**
2.125	2.495	.280	REL300540
2.250	2.620	.280	REL300572
2.375	2.745	.280	REL300603
2.500	**2.870**	**.280**	**REL300635**
2.625	2.995	.280	REL300667
2.750	**3.120**	**.280**	**REL300699**
2.875	3.245	.280	REL300730
3.000	**3.370**	**.280**	**REL300762**
3.125	3.495	.280	REL300794
3.250	**3.620**	**.280**	**REL300826**
3.375	3.745	.280	REL300857
3.500	**3.870**	**.280**	**REL300889**
3.625	3.995	.280	REL300921
3.750	**4.120**	**.280**	**REL300953**
3.875	4.245	.280	REL300984
4.000	**4.370**	**.280**	**REL301016**
4.125	4.495	.280	REL301048
4.250	**4.620**	**.280**	**REL301080**
4.375	4.745	.280	REL301111
4.500	**4.870**	**.280**	**REL301143**
4.625	4.995	.280	REL301175
4.750	**5.230**	**.374**	**REL401207**
4.875	5.355	.374	REL401238
5.000	**5.480**	**.374**	**REL401270**
5.125	5.605	.374	REL401302
5.250	5.730	.374	REL401334
5.375	5.855	.374	REL401365
5.500	**5.980**	**.374**	**REL401397**
5.625	6.105	.374	REL401429
5.750	6.230	.374	REL401461
6.000	**6.480**	**.374**	**REL401524**
6.250	6.730	.374	REL401588
6.500	6.980	.374	REL401651
6.750	7.230	.374	REL401715
7.000	**7.480**	**.374**	**REL401778**
7.250	7.730	.374	REL401842
7.500	7.980	.374	REL401905
7.750	8.230	.374	REL401969
8.000	**8.480**	**.374**	**REL402032**
8.250	8.730	.374	REL402096
8.500	8.980	.374	REL402159
8.750	9.230	.374	REL402223
9.000	**9.480**	**.374**	**REL402286**
9.250	9.730	.374	REL402350
9.500	9.980	.374	REL402413
9.750	10.230	.374	REL402477
10.000	**10.480**	**.374**	**REL402540**

The sizes listed in **bold** font are preferred sizes (more likely to be available for immediate shipment).

Single-Acting

Spring-Energized Turcon® U-Cup

Material:
Turcon® or Zurcon®

Turcon® Variseal® M2

Description

The Turcon® Variseal® M2 is a single-acting seal consisting of a U-shaped seal jacket and a V-shaped corrosion-resistant spring.

Variseal® M2 has an asymmetric seal profile. The heavy profile of its dynamic lip with an optimized front angle offers good leakage control, reduced friction and long service life.

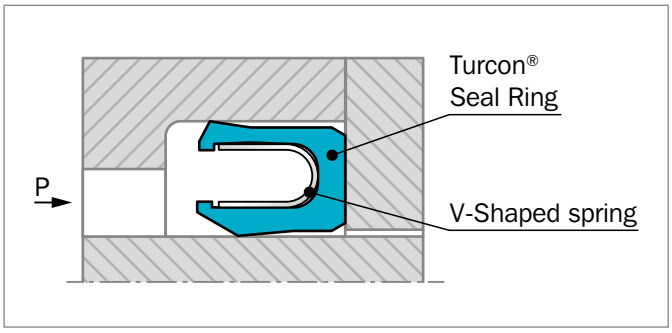

Figure 50: Turcon® Variseal® M2

At low and zero pressure, the metal spring provides the primary sealing force. As the system pressure increases, the main sealing force is achieved by the system pressure and ensures a tight seal from zero to high pressure.

The possibility of matching suitable materials for the seal and the spring allows use in a wide range of applications going beyond the field of hydraulics, e.g. in the chemical, pharmaceutical and foodstuff industries.

The Variseal® M2 can be sterilized and is available in a special Hi-Clean version where the spring cavity is filled with a silicone gel preventing contaminants from being entrapped in the seal. This design also works well in applications involving mud, slurries or adhesives to keep grit from packing into the seal cavity and inhibiting the spring action.

For applications with highly viscous media, please contact our engineering department.

Variseal® M2 seals can be installed in grooves to AS4716 and ISO 3771. The seal can only be installed to a limited extent in closed grooves, for installation instructions, see Figure 14.

ADVANTAGES

- Resistant to most fluids and chemicals
- Low coefficients of friction
- Stick-slip-free operating for precise control
- High abrasion resistance and dimensional stability
- Can handle rapid changes in temperature
- No contamination in contact with foodstuffs, pharmaceutical and medicinal fluids
- High temperature range
- Sterilizable
- Unlimited shelf life

APPLICATION EXAMPLES

Turcon® Variseal® M2 is the recommended sealing element for all applications requiring stick slip free operation as well as chemical resistance against almost all media such as:

- Valves
- Pumps
- Separators
- Actuators
- Dosing devices

It requires a mating surface of high quality to avoid high wear rate.

TECHNICAL DATA

Operating conditions

Pressure:	For static loads: 5,800 psi (40 MPa) For dynamic loads: 2,900 psi (20 MPa)
Velocity:	Reciprocating up to 50 ft/s (15 m/s) Rotating up to 4.2 ft/s (1.3 m/s)
Temperature:	-94 °F to +572 °F (-70 °C to +300 °C) For specific applications beyond indicated range, please inquire.
Media:	Virtually all fluids, chemicals and gases

IMPORTANT NOTE

The above data are maximum values, when using standard materials and geometries, and cannot be used at the same time. e.g. the maximum operating speed depends on material type, pressure, temperature and gap value. Temperature range also dependent on medium.

MATERIALS

All materials used are physiologically safe. They contain no odor or taste-affecting substances.

The following material combination has proven effective for most fluid applications:

Seal ring: Turcon® T40

Spring: Stainless Steel Material No. AISI 301 Code S

For gas application use:

Seal ring: Turcon® T05/Zurcon® Z80

For use in accordance with the demands of the "Food and Drug Administration", suitable materials are available on request.

Table 34: Turcon® and Zurcon® Materials for Variseal® M2

Material, Applications, Properties	Code	Spring Material	Code	Operating Temp.* °F	Mating Surface Material	PSI Max.
Turcon® T40 For all lubricating and non-lubricating hydraulic fluids, hydraulic oils without zinc, water hydraulic, hard mating surfaces Surface texture not suitable for gases Carbon fiber-filled Color: Gray	T40	AISI 301	S	-94 to +500	Steel hardened Steel chrome plated	5,800
Turcon® T05 For all lubricating hydraulic fluids, soft mating surfaces,very good sliding properties, low friction Color: Turquoise	T05	AISI 301	S	-94 to +500	Steel Steel chrome plated Cast iron Stainless steel Aluminium Bronze Alloys	2,900
Zurcon® Z80 For lubricating and non-lubricating hydraulic fluids, high abrasion resistance, very good chemical resistance, limited temperature resistance Ultra high molecular weight polyethylene Color: White to off-white	Z80	AISI 301	S	-94 to +176	Steel Steel chrome plated Stainless steel Aluminum Bronze Ceramic coating	5,800
Turcon® Z48 For tight sealing with long wear life, in applications without high temperatures or corrosive chemicals Color: Black	Z48	AISI 301	S	-76 to +266	Steel Steel chrome plated Cast iron Stainless steel Aluminium Bronze Alloys Ceramic coating	5,800

* Depending on media.

Highlighted materials is standard.

Spring Materials

The standard spring material for Turcon® Variseal® is stainless steel (spring code S).

Table 35: Spring Material

Media	Spring materials	Spring order code
For General use e.g. Oil Grease Air Water, steam Solvents Food, drugs Gas	**Stainless steel** DIN Mat No. 1.4310/1.4319 AISI 301/302 UNS 30100	S (Standard spring material)
For use in corrosive media e.g. Acids Caustics Seawater	**Hastelloy®** C-276 DIN Mat No. 2.4819 UNS N10276	H
For petrochemical use e.g. Crude oil Sour gas	**Elgiloy®** 1) DIN Mat No. 2.4711 UNSR30003	E

® Hastelloy is a registered trademark of Haynes International, Inc.
® Elgiloy is a registered trademark of the Elgiloy Specialty Metals
Alternative brand may be used.
1) NACE-approval

Groove Design

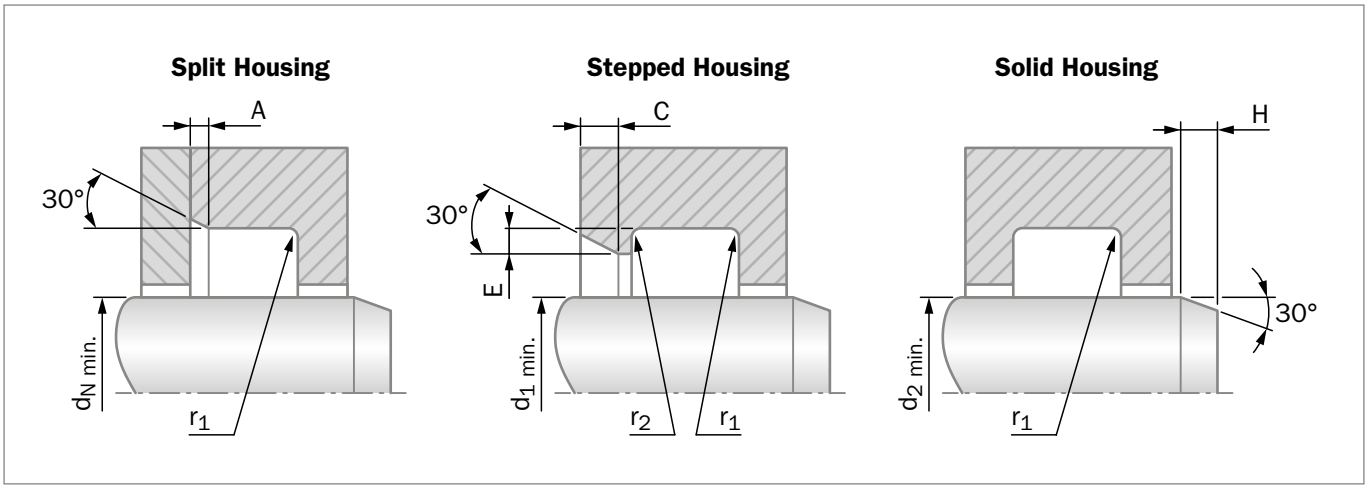

Figure 51: Variseal Groove Configurations

Installation lead-in chamfers and steps to include blend radii and are to be polished.

Table 36: Dimensions for Groove Designs

Series	Rod / Piston Groove Dimensions					
	A Chamfer	r1 Maximum Radius	C Minimum Chamfer	r2 Maximum Radius	E Minimum Step Height	H Minimum Chamfer
000	.010 / .015	.010	.028	.005	.016	.047
100	.015 / .020	.015	.043	.005	.024	.059
200	.015 / .020	.015	.050	.007	.028	.098
300	.020 / .027	.015	.055	.010	.031	.177
400	.020 / .027	.020	.063	.010	.035	.236
500	.030 / .040	.020	.102	.015	.059	.433

Table 37: Groove Design for Rod

Series	Rod Diameter Recommendations		
	Split Groove Ø d_N Minimum	Stepped Groove Ø d_1 Minimum	Solid Groove Ø d_2 Minimum
000	.118	.787	1.250
100	.236	1.181	2.750
200	.394	1.378	4.375
300	.787	1.575	11.750
400	1.378	1.772	19.500
500	3.150	3.150	30.000

Installation Recommendation (Inch Rod Series)

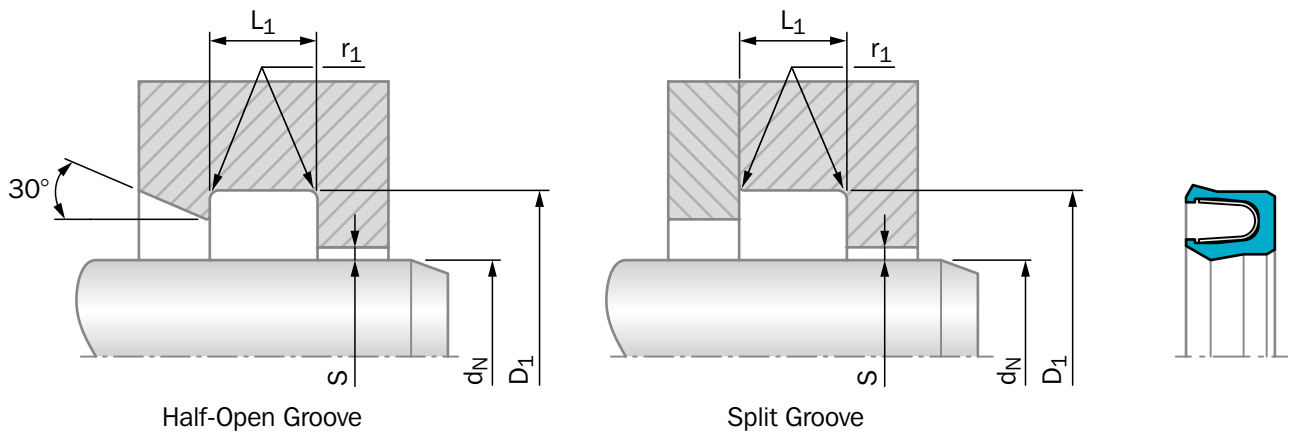

Figure 52: Installation drawing

Table 38: Installation recommendation

TSS Series No. for Types	Cross-section	Groove Width	Radius	Radial Clearance S_{max}*			
Variseal® M2	**D_1 - d_N (Ref)**	**L_1 +.010**	**$r_{1\ max}$**	**300 psi**	**1500 psi**	**3000 psi**	**5000 psi**
RVAA	.062	.094	.010	.008	.004	.003	.002
RVAB	.093	.141	.015	.010	.006	.004	.003
RVAC	.125	.188	.015	.014	.008	.006	.003
RVAD	.187	.281	.015	.020	.010	.008	.004
RVAE	.250	.375	.020	.024	.012	.010	.005
RVAG	.375	.591	.020	.030	.015	.012	.006

ORDERING EXAMPLE

Turcon® Variseal® M2, recommended range, Series RVAC (from Table 38).

Dash No.:	230
TSS Part No.:	RVACNB230 (from Table 39)

For other seal and spring materials please contact your local Trelleborg Sealing Solutions sales office.

TSS Article No. RVAC NB230 - T40 S M

- TSS Series No. — RVAC
- Size / Dash No. — NB230
- Quality Index (Standard) — -
- Material Code (Seal Ring) — T40
- Material Code (O-Ring) — S
- Load (Spring) — M

Table 39: Installation dimensions / TSS Part No.

Rod Diameter	Groove Diameter	Groove Width	TSS Part No.
d_N h9	D_1 H9	L_1 +.010	
.250	.437	.141	RVABNB108
.313	.500	.141	RVABNB109
.375	**.562**	**.141**	**RVABNB110**
.438	.625	.141	RVABNB111
.500	**.687**	**.141**	**RVABNB112**
.563	.750	.141	RVABNB113
.625	**.875**	**.188**	**RVACNB208**
.688	.938	.188	RVACNB209
.750	**1.000**	**.188**	**RVACNB210**
.813	1.063	.188	RVACNB211
.875	**1.125**	**.188**	**RVACNB212**
.938	1.188	.188	RVACNB213
1.000	**1.250**	**.188**	**RVACNB214**
1.063	1.313	.188	RVACNB215
1.125	1.375	.188	RVACNB216
1.188	1.438	.188	RVACNB217
1.250	**1.500**	**.188**	**RVACNB218**
1.313	1.563	.188	RVACNB219
1.375	1.625	.188	RVACNB220
1.438	1.688	.188	RVACNB221
1.500	**1.875**	**.281**	**RVADNB325**
1.625	2.000	.281	RVADNB326
1.750	**2.125**	**.281**	**RVADNB327**
1.875	2.250	.281	RVADNB328
2.000	**2.375**	**.281**	**RVADNB329**
2.125	2.500	.281	RVADNB330
2.250	**2.625**	**.281**	**RVADNB331**
2.375	2.750	.281	RVADNB332
2.500	**2.875**	**.281**	**RVADNB333**
2.625	3.000	.281	RVADNB334
2.750	**3.125**	**.281**	**RVADNB335**
2.875	3.250	.281	RVADNB336
3.000	**3.375**	**.281**	**RVADNB337**
3.125	3.500	.281	RVADNB338
3.250	3.625	.281	RVADNB339
3.375	3.750	.281	RVADNB340
3.500	**3.875**	**.281**	**RVADNB341**
3.625	4.000	.281	RVADNB342
3.750	4.125	.281	RVADNB343
3.875	4.250	.281	RVADNB344

Rod Diameter	Groove Diameter	Groove Width	TSS Part No.
d_N h9	D_1 H9	L_1 +.010	
4.000	**4.375**	**.281**	**RVADNB345**
4.125	4.500	.281	RVADNB346
4.250	4.625	.281	RVADNB347
4.375	4.750	.281	RVADNB348
4.500	**4.875**	**.281**	**RVADNB349**
4.625	5.125	.375	RVAENB426
4.750	5.250	.375	RVAENB427
4.875	5.375	.375	RVAENB428
5.000	**5.500**	**.375**	**RVAENB429**
5.125	5.625	.375	RVAENB430
5.250	5.750	.375	RVAENB431
5.375	5.875	.375	RVAENB432
5.500	**6.000**	**.375**	**RVAENB433**
5.625	6.125	.375	RVAENB434
5.750	6.250	.375	RVAENB435
6.000	**6.500**	**.375**	**RVAENB437**
6.250	6.750	.375	RVAENB438
6.500	7.000	.375	RVAENB439
6.750	7.250	.375	RVAENB440
7.000	**7.500**	**.375**	**RVAENB441**
7.250	7.750	.375	RVAENB442
7.500	8.000	.375	RVAENB443
7.750	8.250	.375	RVAENB444
8.000	**8.500**	**.375**	**RVAENB445**
8.500	9.000	.375	RVAENB446
9.000	9.500	.375	RVAENB447
9.500	10.000	.375	RVAENB448
10.000	**10.500**	**.375**	**RVAENB449**
10.500	11.000	.375	RVAENB450
11.000	11.500	.375	RVAENB451
11.500	12.000	.375	RVAENB452
12.000	**12.500**	**.375**	**RVAENB453**
12.500	13.000	13.000	RVAENB454
13.000	13.500	13.500	RVAENB455
13.500	14.000	14.000	RVAENB456
14.000	14.500	14.500	RVAENB457
14.500	15.000	15.000	RVAENB458
15.000	15.500	15.500	RVAENB459
15.500	16.000	16.000	RVAENB460

The sizes listed in **bold** font are preferred sizes (more likely to be available for immediate shipment).

Double-Acting

O-Ring-Energized Turcon® Slipper Seal

For O-Ring Grooves

Material:
Turcon® , Zurcon® and Elastomer

Turcon® Double Delta®

Description

Turcon® Double Delta® is an O-Ring-energized plastic-faced seal. The seal is designed to expand and improve the service parameters of O-Rings and is installed in existing O-Ring grooves.

Double Delta® combines the flexibility and response of O-Rings with the wear and friction characteristics of the Turcon® materials in dynamic applications.

The figures below show the cross section of the Double Delta® .

The double-acting performance of the seal comes from the symmetrical cross section which allows the seal to respond to pressure in both directions.

Initial contact pressure is provided by radial compression of the O-Ring. When the system pressure is increased the O-Ring transforms this into additional contact pressure. The contact pressure of the seal is thereby automatically adjusted so sealing is ensured under all service conditions.

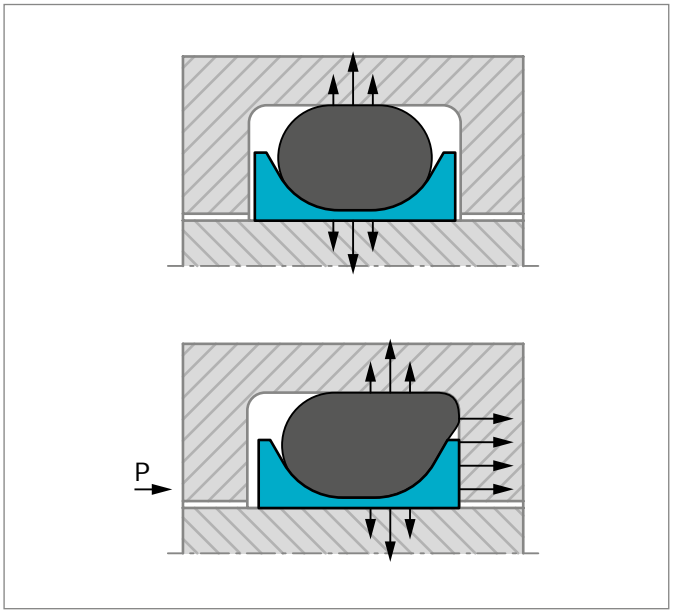

Figure 53: Turcon® Double Delta® with and without pressure

ADVANTAGES

- Compact groove dimensions and simple installation
- Low friction without stick-slip
- Resistance against wear and extrusion
- Rod seals available for all diameters from .080 to 40.000 inches (2 to 999.9mm)
- Standard cross sections cover AS 568B and important metric O-Rings, other cross sections available on request
- Also fits groove dimensions per MIL-G-5514F

APPLICATION EXAMPLES

The Turcon® Double Delta® is preferably used as a double acting seal for hydraulic and pneumatic equipment in sectors such as:

- Valve stems
- Mini hydraulics
- Hydraulic tools

It is particularly recommended for light duty and small diameter applications.

TECHNICAL DATA

Operating conditions

Pressure:	Up to 5,000 psi (35 MPa)
Velocity:	Up to 50 ft/s (15 m/s)
Temperature:	-49 °F to +392 °F (-45 °C to +200 °C) (according to O-Ring material)
Media:	Mineral oil, non-flammable fluids, environmentally safe fluids and others according to O-Ring material

IMPORTANT NOTE

The above data are maximum values and cannot be used at the same time. e.g. the maximum operating speed depends on material type, pressure, temperature and gap value. Temperature range also dependent on medium.

MATERIALS

Standard Application:
For hydraulic components with reciprocating movement in mineral oils containing zinc or medium with good lubricating performance and hard mating surface:

Seal Ring: Turcon® T46

Energizer: NBR, 70 Shore A N
FKM, 70 Shore A V
depending on the temperature

Set code: T46N or T46V

Special Application:
Short stroke movements, poor lubricating fluids and soft mating surfaces.

Seal Ring: Turcon® T24

Energizer: NBR, 70 Shore A N
FKM, 70 Shore A V
depending on the temperature

Set code: T24N or T24V

For low friction requirement in dynamic hydraulic components with good lubricating medium:

Seal Ring: Turcon® T05

Energizer: NBR, 70 Shore A N
FKM, 70 Shore A V
depending on the temperature

Set code: T05N or T05V

For specific applications other material combinations as listed may also be used. Please contact your local Trelleborg Sealing Solutions sales office.

Table 40: Turcon® Materials for Double Delta®

Material, Applications, Properties	Code	O–Ring Material Shore A	Code	O-Ring Operating Temp.* °F	Mating Surface Material	PSI Max.
Turcon® M12 First material choice for seals in linear motion Overall improved properties For new constructions and updating For all commonly applied hydraulic fluids including fluids with low lubrication performance Lowest friction and best sliding properties Lowest wear on seals Improved absorption of abrassive contaminants Low wear or abrasion of counter surface BAM tested Mineral fiber and additives filled Color: Dark gray	M12	NBR-70	N	-22 to +212	Steel Steel hardened Steel chrome plated (rod) Steel plated (rod) Cast iron Stainless steel Titanium	7,250
		NBR-70 Low temp.	T	-49 to +176		
		FKM-70	V	+14 to +392		
Turcon® T46 Standard material for hydraulics, high compressive strength, good sliding and wear properties, good extrusion resistance BAM tested Bronze filled Color: Grayish to dark brown	T46	NBR-70	N	-22 to +212	Steel hardened Steel chrome plated Cast iron	5,000
		NBR-70 Low temp.	T	-49 to +176		
		FKM-70	V	+14 to +392		
Turcon® T24 For all lubricating and non-lubricating hydraulic fluids, soft mating surfaces Carbon filled Color: Black	T24	NBR-70	N	-22 to +212	Steel Steel chrome plated Cast iron Stainless steel Aluminum Bronze	3,625
		NBR-70 Low temp.	T	-49 to +176		
		FKM-70	V	+14 to +392		
		EPDM-70	E**	-49 to +293		
Turcon® T05 For all lubricating hydraulic fluids, hard mating surfaces,very good sliding properties, low friction Color: Turquoise	T05	NBR-70	N	-22 to +212	Steel hardened Steel chrome plated	2,900
		NBR-70 Low temp.	T	-49 to +176		
		FKM-70	V	+14 to +392		

* The O-Ring Operation Temperature is only valid in mineral hydraulic oil.

** Material not suitable for mineral oils.

BAM: Tested by "Bundesanstalt Materialprüfung, Germany"

Highlighted materials are standard.

Installation Recommendation (Inch Rod Series)

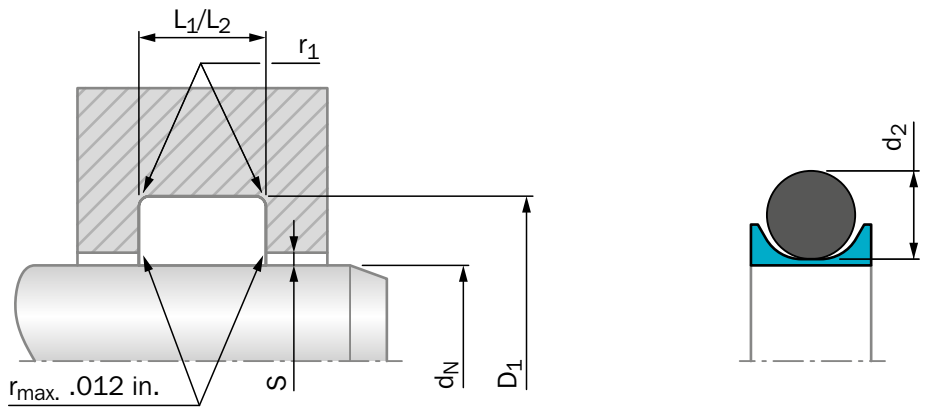

Figure 54: Installation drawing

Table 41: Installation recommendation

Dash Sizes	Rod Diameter d_N f8/h9			Groove Diameter	Groove Width		Radius	Radial Clearance S_{max}			O-Ring Cross-Section
	Standard Application	Light Application	Heavy Duty Application	D_1 H9	L_1 +.008*	L_2 +.008**	$r_{1\,max}$	10 MPa 1500 psi	20 MPa 3000 psi	40 MPa 5800 psi	d_2
006 - 028	.125 - .437	.500 - 1.375	-	d_N +.110	.093	.138	.005	.004	.003	.002	.070
104 - 151	.500 - .812	.875 - 3.000	.125 - .437	d_N +.176	.140	.171	.005	.006	.004	.003	.103
201 - 250	.875 - 1.500	1.625 - 5.000	.187 - .812	d_N +.242	.187	.208	.010	.008	.006	.003	.139
309 - 353	1.625 - 4.375	.437 - 5.000	.437 - 1.500	d_N +.370	.281	.311	.020	.010	.008	.004	.210
425 - 461	4.500 - 16.000	-	-	d_N +.474	.375	.408	.020	.012	.010	.006	.275

* L_1 is for "0" Back-up width groove - RD00_B series.

**L_2 is for "1" Back-up width groove - RD01_B series.

ORDERING EXAMPLE

Turcon® Double Delta® , complete with O-Ring, standard range, series RD00 (from Table 41).

Dash No.:	445
TSS Part No.:	RD000B445 (from Table 42)

Select the material from Table 40. The corresponding code numbers are appended to the TSS Part No. (from Table 42). Together they form the TSS Article No.
For all intermediate sizes not shown in Table 42, the TSS Article No. can be determined from the example opposite.

TSS Article No. RD00 0 B 445 - T46 N

- TSS Series No. — RD00 - 0 Back-up width groove L_1; RD01 - 1 Back-up width groove L_2
- 0=std, N=with notches
- Groove Standard
- Dash Size
- Quality Index (Standard)
- Material Code (Seal Ring)
- Material Code (O-Ring)

Table 42: Installation dimensions / TSS Part No.

Rod Diameter	Groove Diameter	Groove Width	TSS Part No.	Groove Width	TSS Part No.
d_N f8/h9	D_1 H9	L_1 +.008		L_2 +.008	
.187	**.297**	**.093**	**RD000B008**	**.138**	**RD010B008**
.219	.329	.093	RD000B009	.138	RD010B009
.250	**.360**	**.093**	**RD000B010**	**.138**	**RD010B010**
.312	.422	.093	RD000B011	.138	RD010B011
.375	**.485**	**.093**	**RD000B012**	**.138**	**RD010B012**
.437	.547	.093	RD000B013	.138	RD010B013
.500	**.610**	**.093**	**RD000B014**	**.138**	**RD010B014**
.563	.672	.093	RD000B015	.138	RD010B015
.625	**.735**	**.093**	**RD000B016**	**.138**	**RD010B016**
.688	.797	.093	RD000B017	.138	RD010B017
.750	**.860**	**.093**	**RD000B018**	**.138**	**RD010B018**
.813	.922	.093	RD000B019	.138	RD010B019
.875	**.985**	**.093**	**RD000B020**	**.138**	**RD010B020**
.938	1.047	.093	RD000B021	.138	RD010B021
1.000	**1.176**	**.140**	**RD000B120**	**.171**	**RD010B120**
1.063	1.238	.140	RD000B121	.171	RD010B121
1.125	**1.301**	**.140**	**RD000B122**	**.171**	**RD010B122**
1.188	1.363	.140	RD000B123	.171	RD010B123
1.250	**1.426**	**.140**	**RD000B124**	**.171**	**RD010B124**
1.313	1.488	.140	RD000B125	.171	RD010B125
1.375	1.551	.140	RD000B126	.171	RD010B126
1.438	1.613	.140	RD000B127	.171	RD010B127
1.500	**1.676**	**.140**	**RD000B128**	**.171**	**RD010B128**
1.563	1.738	.140	RD000B129	.171	RD010B129
1.625	1.801	.140	RD000B130	.171	RD010B130
1.688	1.863	.140	RD000B131	.171	RD010B131
1.750	**1.926**	**.140**	**RD000B132**	**.171**	**RD010B132**
1.813	1.988	.140	RD000B133	.171	RD010B133
1.875	2.051	.140	RD000B134	.171	RD010B134
1.938	2.113	.140	RD000B135	.171	RD010B135
2.000	**2.176**	**.140**	**RD000B136**	**.171**	**RD010B136**
2.063	2.238	.140	RD000B137	.171	RD010B137
2.125	2.301	.140	RD000B138	.171	RD010B138
2.188	2.363	.140	RD000B139	.171	RD010B139
2.250	**2.426**	**.140**	**RD000B140**	**.171**	**RD010B140**
2.313	2.488	.140	RD000B141	.171	RD010B141
2.375	2.551	.140	RD000B142	.171	RD010B142
2.438	2.613	.140	RD000B143	.171	RD010B143
2.500	**2.676**	**.140**	**RD000B144**	**.171**	**RD010B144**
2.625	2.867	.187	RD000B231	.208	RD010B231

Rod Diameter	Groove Diameter	Groove Width	TSS Part No.	Groove Width	TSS Part No.
d_N f8/h9	D_1 H9	L_1 +.008		L_2 +.008	
2.750	**2.992**	**.187**	**RD000B232**	**.208**	**RD010B232**
2.875	3.117	.187	RD000B233	.208	RD010B233
3.000	**3.242**	**.187**	**RD000B234**	**.208**	**RD010B234**
3.125	3.367	.187	RD000B235	.208	RD010B235
3.250	**3.492**	**.187**	**RD000B236**	**.208**	**RD010B236**
3.375	3.617	.187	RD000B237	.208	RD010B237
3.500	**3.742**	**.187**	**RD000B238**	**.208**	**RD010B238**
3.625	3.867	.187	RD000B239	.208	RD010B239
3.750	**3.992**	**.187**	**RD000B240**	**.208**	**RD010B240**
3.875	4.117	.187	RD000B241	.208	RD010B241
4.000	**4.242**	**.187**	**RD000B242**	**.208**	**RD010B242**
4.125	4.367	.187	RD000B243	.208	RD010B243
4.250	4.492	.187	RD000B244	.208	RD010B244
4.375	4.617	.187	RD000B245	.208	RD010B245
4.500	**4.742**	**.187**	**RD000B246**	**.208**	**RD010B246**
4.625	4.867	.187	RD000B247	.208	RD010B247
4.750	4.992	.187	RD000B248	.208	RD010B248
4.875	5.117	.187	RD000B249	.208	RD010B249
5.000	**5.474**	**.375**	**RD000B429**	**.408**	**RD010B429**
5.125	5.599	.375	RD000B430	.408	RD010B430
5.250	5.724	.375	RD000B431	.408	RD010B431
5.375	5.849	.375	RD000B432	.408	RD010B432
5.500	**5.974**	**.375**	**RD000B433**	**.408**	**RD010B433**
5.625	6.099	.375	RD000B434	.408	RD010B434
5.750	6.224	.375	RD000B435	.408	RD010B435
5.875	6.349	.375	RD000B436	.408	RD010B436
6.000	**6.474**	**.375**	**RD000B437**	**.408**	**RD010B437**
6.250	6.724	.375	RD000B438	.408	RD010B438
6.500	**6.974**	**.375**	**RD000B439**	**.408**	**RD010B439**
6.750	7.224	.375	RD000B440	.408	RD010B440
7.000	**7.474**	**.375**	**RD000B441**	**.408**	**RD010B441**
7.250	7.724	.375	RD000B442	.408	RD010B442
7.500	7.974	.375	RD000B443	.408	RD010B443
7.750	8.224	.375	RD000B444	.408	RD010B444
8.000	**8.474**	**.375**	**RD000B445**	**.408**	**RD010B445**
8.500	8.974	.375	RD000B446	.408	RD010B446
9.000	9.474	.375	RD000B447	.408	RD010B447
9.500	9.974	.375	RD000B448	.408	RD010B448
10.000	**10.474**	**.375**	**RD000B449**	**.408**	**RD010B449**

The sizes listed in **bold** font are preferred sizes (more likely to be available for immediate shipment).
Larger sizes up to 102 inches (2,600 mm) available upon request.

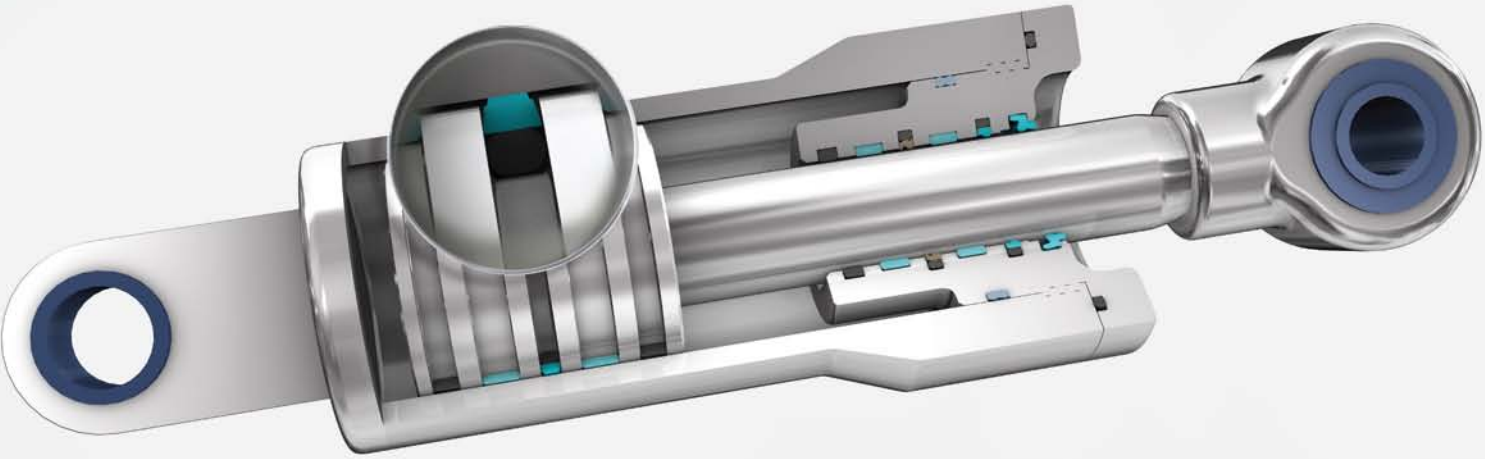

Contents

134	Choice of the Sealing Element
138	Design Instructions
140	Installation of Piston Seals
145	Zurcon® Wynseal
151	Zurcon® Wynseal M
159	Turcon® Glyd Ring® T
167	Zurcon® Glyd Ring® P (ISO)
173	Turcon® Glyd Ring®
183	Turcon® Glyd Ring® C
191	Zurcon® Glyd Ring® P
197	Turcon® Stepseal® 2K
207	Turcon® Double Delta®
215	Turcon® CST Seal
223	Turcon® AQ-Seal®
229	Turcon® AQ-Seal® 5
237	Turcon® Variseal® M2

Choice of the Sealing Element

Sealing elements have a decisive influence on the design, function and service life of hydraulic and pneumatic cylinders and systems.

This also applies to piston seals. Leak tightness, wear and gap extrusion resistance, resistance to process media and temperatures, low friction, compact form and simple installation are required to meet the demands of the industry.

The significance of these parameters and their limits depends on the requirements of the specific application. Trelleborg Sealing Solutions has developed a complete range of seals which, due to their optimized geometries and designs and the use of high-quality materials such as Turcon® and Zurcon® , satisfies the technical and economic demands of the industry.

In order to be in a position to select the most appropriate seal type and material, it is necessary to first define all the desired functional parameters. Table 43 can then be used to make an initial selection of seals according to the specific requirements of the application.

The second column of the table contains the page number on which general information and specific design and installation instructions on the particular seal type and materials (or material combinations with multi-element seals, e.g. Turcon® Glyd Ring® T) can be found.

Furthermore, attention is drawn to the quality of the mating surface. We recommend that the limits specified there be observed, as they have a decisive influence on the functionality and service life of the system.

The final choice of seal type and material must also take into account the detailed information on the seal elements.

Please do not hesitate to contact your local Trelleborg Sealing Solutions sales office for further information on specific applications and special technical questions.

NOTE ON ORDERING

All multi-element standard piston seals, e.g. Glyd Ring® T, are supplied as complete seal sets. The supply includes the seal and matching elastomer energizing elements.

For all new applications, we recommend the use of the seal types and preferred sizes (ISO series, wherever possible) listed in this catalog.

Other combinations of Turcon® materials and special designs can be developed and supplied for special applications in all intermediate sizes up to 106 inches (2,700mm) diameter.

The sizes contained in this catalog are generally available from stock or can be supplied on short notice. We reserve the right to modify our supply program.

Table 43: Selection Criteria for Piston Seals

Seal		Application				Standard	Size Range	Action		Technical Data*			Recommended Seal Material
										Temp. Range**	Velocity	Pressure	
Type	Page	Field of Application	Light	Media	Heavy	ISO/DIN	Inch	Single	Double	°F	ft/s	PSI Max.	
Zurcon® Wynseal	145	Standard cylinders	•	•		7425-1	.375 - 26		•	-31/ +230	1.65	3,625	Zurcon® Z20
		Mobile hydraulics	•	•									
Zurcon® Wynseal M	151	Standard cylinders	•	•		7425-1	.375 - 86		•	-49/ +230	1.65	3,625	Zurcon® Z54
		Mobile hydraulics	•	•								6,525	Zurcon® Z53
		Handling machinery	•	•									
		Agriculture	•	•			.375 - 102			-49/ +392	32.8	5,000	Turcon® M12
Turcon® Glyd Ring® T	159	Mobile hydraulics	•	•	•	7425-1	.312 - 106		•	-49/ +392	50	5,800	Turcon® M12
		Standard cylinders	•	•	•								
		Machine tools	•	•	•							7,250	Zurcon® T46
		Injection molding machines	•	•	•								
		Presses	•	•	•		.312 - 90			-49/ +230	6.5	8,700	Zurcon® Z53
		Automotive industry	•	•	•								
Zurcon® Glyd Ring® P (ISO)	167	Mobile hydraulics		•	•	7425-1	1 - 10		•	-40/ +230	3.3	7,250	Zurcon® Z66
		Construction machinery		•	•								
		Agriculture machinery		•	•								
Turcon® Glyd Ring®	173	Mobile hydraulics	•	•	•	7425-1	.312 - 102		•	-49/ +392	50	7,250	Turcon® M12
		Machine tools	•	•	•							7,250	Turcon® T46
		Injection molding machines	•	•	•							2,900	Turcon® T05
		Presses	•	•	•		.312 - 86			-49/ +230	6.5	8,700	Zurcon® Z53

* The data below are maximum values and cannot be used at the same time. The max. pressure depends on temperature and gap dimension.
** Temperature range depends on choice of elastomer material and media. In the case of Turcon® seals in unpressurized applications in temperatures below 32 °F please contact your local sales office.

Seal		Application				Standard	Size Range	Ac-tion		Technical Data*			Recom-mended Seal Material
										Temp. Range**	Velocity	Pressure	
		Field of Application											
Type	Page		Light	Media	Heavy	ISO/DIN	Inch	Single	Double	°F	ft/s	PSI Max.	
Turcon® Glyd Ring® C	183	Special cylinders	•	•	•	-	.250 - 106		•	-49/ +392	50	7,250	Turcon® M12
		Pumps and values	•	•	•							7,250	Turcon® T46
		Machine tools	•	•	•							2,900	Turcon® T05
		Robotics/ manipulators	•	•	•								
Zurcon® Glyd Ring® P	191	Earthmoving equipment		•	•	7425-1	2 - 10		•	-40/ +230	3.3	7,250	Zurcon® Z66
		Mobile hydraulics		•	•								
		Construction machinery		•	•								
Turcon® Stepseal® 2K	197	Mobile hydraulics	•	•	•	7425-1	.313 - 106	•		-49/ +392	50	7,250	Turcon® M12
		Standard cylinders	•	•	•								
		Machine tools	•	•	•							7,250	Turcon® T46
		Injection molding machines	•	•	•								
		Presses	•	•	•		.312 - 90			-49/ +212	6.5	8,700	Zurcon® Z53
Turcon® Double Delta®	207	Machine tools	•	•		-	.250 - 106		•	-49/ +392	50	2,900	Turcon® T05
		Handling devices/ manipulators	•	•									
		Valves	•	•								5,000	Turcon® M12
		Chemical industry	•	•								5,000	Turcon® T46
Turcon® CST Seal	215	Hydraulics		•	•	-	1 - 106		•	-60/ +250	5	7,250	Turcon® T46
		Mobile hydraulics		•	•								Turcon® M12

* The data below are maximum values and cannot be used at the same time. The max. pressure depends on temperature and gap dimension.
** Temperature range depends on choice of elastomer material and media. In the case of Turcon® seals in unpressurized applications in temperatures below 32 °F please contact your local sales office.

Seal		Application				Standard	Size Range	Ac-tion		Technical Data*			Recom-mended Seal Material
										Temp. Range**	Velocity	Pressure	
Type	Page	Field of Application	Light	Media	Heavy	ISO/DIN	Inch	Single	Double	°F	ft/s	PSI Max.	
Turcon® AQ-Seal®	223	Standard cylinders	•	•		7245-1	.625 - 100		•	-49/ +392	6.5	5,800	Turcon® M12
		Piston accumulators	•	•								5,800	Turcon® T46
		Fluid/gas separation	•	•									
		Holding cylinders	•	•									
Turcon® AQ-Seal® 5	229	Mobile hydraulics		•	•	-	.750 - 100		•	-49/ +392	10	7,250	Turcon® M12
		Holding cylinders		•	•								
		Piston accumulators		•	•							7,250	Turcon® T46
Turcon® Variseal® M2	237	High and low temperatures	•	•		AS4716	.236 - 98.425	•		-94/ +572	50	5,800	Turcon® T40
		Aggresive media	•	•			.236 - 102					2,900	Turcon® T05
		Foodstuffs	•	•									

* The data below are maximum values and cannot be used at the same time. The max. pressure depends on temperature and gap dimension.
** Temperature range depends on choice of elastomer material and media. In the case of Turcon® seals in unpressurized applications in temperatures below 32 °F please contact your local sales office.

Design Instructions

LEAD-IN CHAMFERS

Piston seals are always fitted with an interference fit. In order to avoid damage during installation, lead-in chamfers and rounded edges must be provided on the cylinder barrel (Figure 55). If this is not possible for design reasons, a separate installation tool must be used.

The minimum lead-in chamfer Z_{min} depends on the profile size of the seal and can be seen in the following tables.

Generally Z_{min}, from Table 44, Table 45 and Table 46 is recommended, but at 15° Z must also exceed 2.5% of the bore diameter D_N. at 20°, Z is calculated correspondingly.

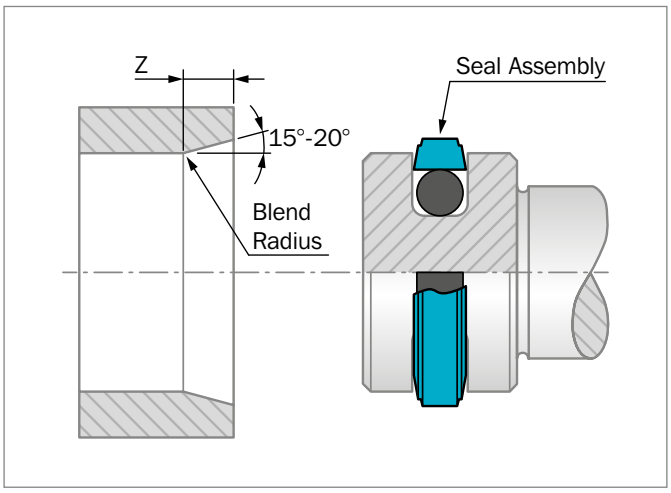

Figure 55: Lead-in chamfer

Table 44: Elastomer Energized Seals

Minimum chamfer for a calibrated seal.

Groove Width L_1*	Lead-in Chamfer Length Z_{min}	
	15°	20°
.087	.098	.079
.126	.118	.098
.165	.138	.118
.248	.197	.157
.319	.256	.197
.374	.295	.217
.543	.413	.315

* The groove width can be found in table "Installation dimensions" for Turcon® Glyd Ring® , Glyd Ring® T, AQ-Seal® , Stepseal® 2K, Zurcon® Wynseal and Wynseal M.

Table 45: Compact Seal and Variseal®

Minimum for a calibrated seal (Variseal®)

Variseal® M2 Series	Lead-in Chamfer Length Z_{min}	
	15°	20°
PVAA	.177	.118
PVAB/PVAC	.197	.157
PVAD	.295	.256
PVAE	.472	.354
PVAG	.669	.512

Table 46: Double Delta®

Minimum chamfer for a calibrated seal.

O-Ring Cross Section** d_2		Lead-in Chamfer* Length Z_{min}	
		15°	20°
.070	-	.098	.079
.094	.103	.118	.098
.118	.139	.138	.118
.210	.225	.197	.157
.275	-	.256	.197
.331	-	.295	.217

* Though not less than 2.5% of the bore diameter.
** The O-Ring cross section, d_2, can be found in the appropriate table, "Installation Dimensions", from the Double Delta® chapter.

For Turcon® seals which have been expanded over a piston; the seal must be calibrated with a separate calibration sleeve, or the cylinder tube, where the inlet chamfer is minimum 2 x the value from Table 44: Elastomer Energized Seals.

SURFACE ROUGHNESS DIN EN ISO 4287

The functional reliability and service life of a seal depends to a very great extent on the quality and surface finish of the mating surface to be sealed.

Scores, scratches, pores and concentric or spiral machining marks are not permitted. Higher demands must be made on the surface finishes of dynamic surfaces than those of static mating surfaces.

The characteristics most frequently used to describe the surface microfinish R_a, R_z and R_{max} are defined in DIN EN ISO 4287. These characterics alone, however, are not sufficient for assessing the suitability of seal technology. The material contact area of the surface roughness profile M_r in accordance with DIN EN ISO 4287 should be demanded. The significance of this surface specification is illustrated in Figure 56. It shows clearly that specification of R_a and R_z alone does not describe the surface roughness profile accurately enough for the seal technology and is not sufficient for assessing the suitability. The material contact area M_r is essential for assessing surfaces, as this parameter is determined by the specific surface roughness profile. This depends on the machining process employed.

Trelleborg Sealing Solutions recommends that the following surface finishes be observed:

Table 47: Surface Roughness

Surface Roughness µinch			
Parameter	Mating Surface		Groove Surface
	Turcon® Materials	Zurcon® and Rubber	
R_{max}	25 - 100	40 - 160	<625
$R_{z\ DIN}$	16 - 63	25 - 100	<400
R_a	2 - 8	4 - 16	<63

The material contact area M_r should be approx. 50 to 70%, determined at a cut depth c = 0.25 x R_z, relative to a reference line of $C_{ref.}$ 5%.

Surface profile µinch	R_a	R_z	M_r
closed profile form	4	40	70%
open profile form 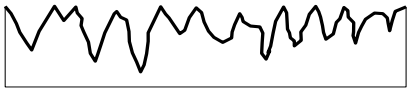	8	40	15%

Figure 56: Profile forms of surfaces

Figure 56 shows two surface profiles, both of which exhibit nearly the same value for R_z in the test procedure. The difference becomes obvious only when the material contact area of the surface roughness profiles are compared. This shows that the upper roughness profile with M_r = 70% has the better seal/mating surface ratio.

Installation of Piston Seals

GENERAL INSTALLATION INSTRUCTIONS

The following points should be observed before installation of the seals:

- Ensure the cylinder tube has a lead-in chamfer; if not, use an installation sleeve
- Deburr and chamfer or round sharp edges, cover the tips of screw threads
- Remove machining residues such as chips, dirt and other foreign particles and carefully clean all parts
- The seals can be installed more easily if they are greased or oiled. Attention must be paid to the compatibility of the seal materials with these lubricants. Use only grease without solid additives (e.g. molybdenum disulphide or zinc sulphide).
- Use no sharp-edged installation tools

INSTALLATION IN SPLIT GROOVES

Installation in split grooves is simple. The sequence of installation corresponds to the configuration of the seal. Individual seal elements must not be allowed to twist. During final installation (installation of the piston in the cylinder), elastomer or spring-preloaded seals must be sized. The corresponding cylinder barrel can be used for this purpose, provided it has a long lead-in chamfer. Alternatively, a sizing sleeve should be used.

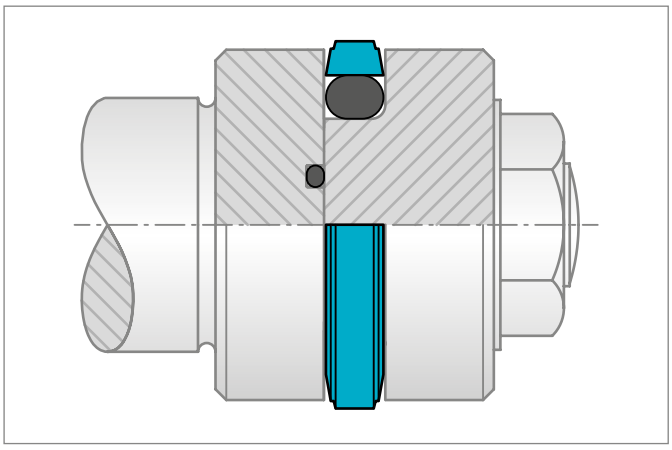

Figure 57: Installation in a split groove

INSTALLATION IN CLOSED GROOVES

- Without installation aids

If observing the instructions in the chapter “General installation instructions,“ installation of Compact Seal and Wynseal seal elements in closed grooves is relatively simple.

For Turcon® and Zurcon® seals, the use of installation aids is recommended. If installation has to be performed without installation aids, however, the following points should be observed:

Turcon® seals can be installed more easily by heating in oil or water or using a hot air fan to approx. 176 °F to 212 °F (80 °C to 100 °C) (expanding and then shrinking back to the original form).

Use no sharp edged tools to expand the seal rings.

Sizing of the seal ring is achieved with a separate sizing sleeve, or with the cylinder tube provided this has lead-in chamfers equivalent to 2x the values from Table 44.

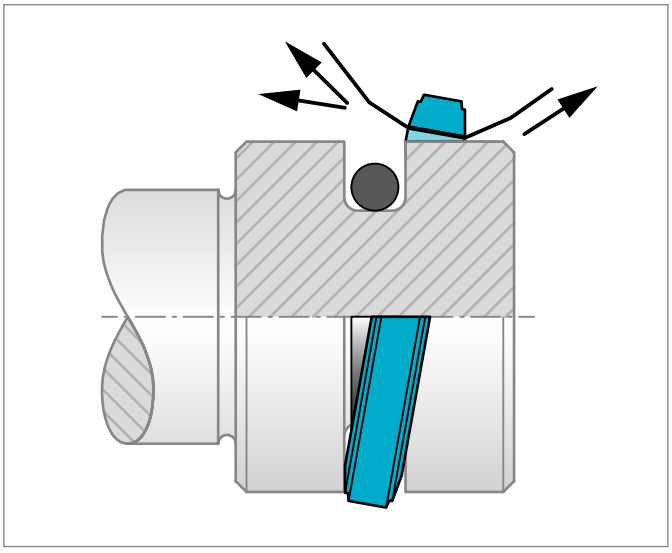

Figure 58: Fitting the seal ring onto the O-Ring in the groove

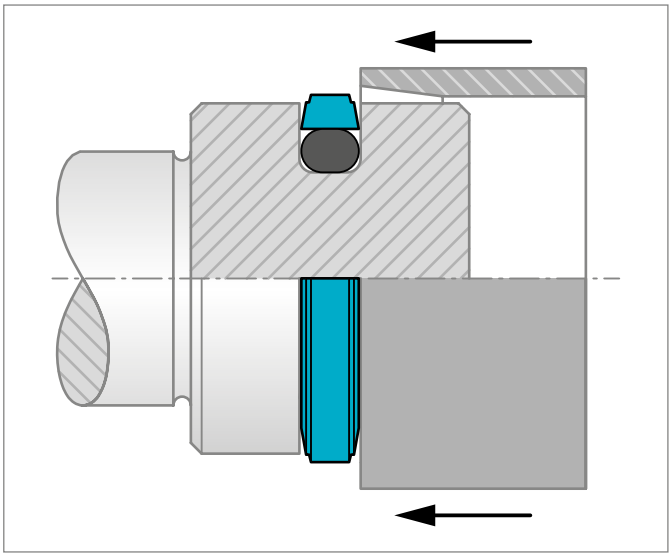

Figure 59: Sizing of the installed seal

INSTALLATION IN CLOSED GROOVES

- With installation aids
  Use of a three-piece installation tool is recommended for the series production installation of Turcon® and Zurcon® seal elements. The tool consists of:
    - Installation sleeve
    - Expanding sleeve
    - Sizing sleeve

All these parts should be made of a polymer material (e.g. PA6) with good sliding characteristics and low abrasiveness to avoid damage to the seals.

In view of the wide range of sizes and the application-specific installation conditions, these installation tools cannot be supplied as standard by Trelleborg Sealing Solutions.

On request, however, we will gladly provide specimen drawings to allow you to manufacture these tools.

The sequence of installation is illustrated in Figure 60 to Figure 62.
Note, however, that the installation of Turcon® seal elements should be performed quickly in order to ensure optimum recovery of the seal ring.

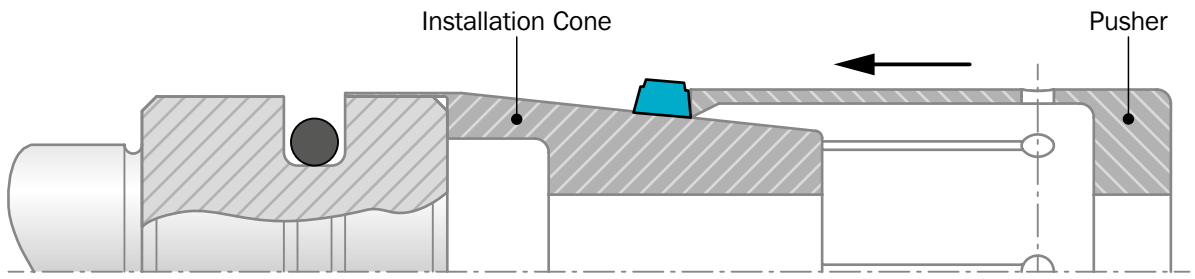

Figure 60: Expanding the Turcon® or Zurcon® sealing element using an expanding sleeve over the installation sleeve

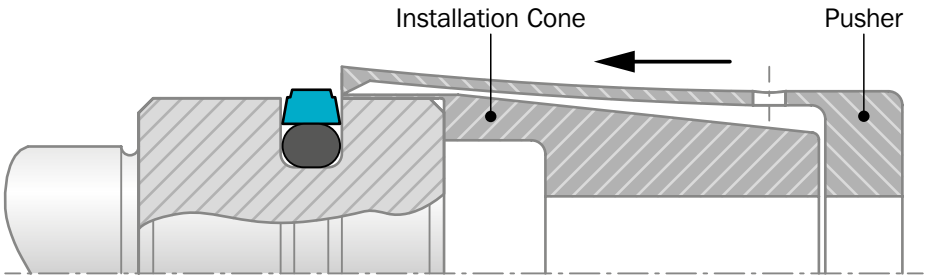

Figure 61: Sealing element after snapping into the groove

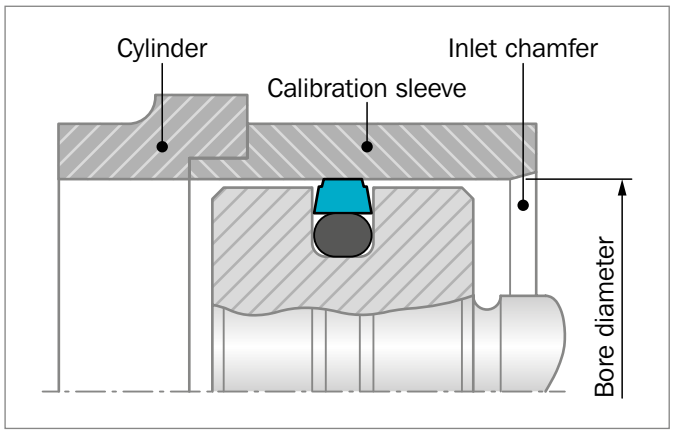

Figure 62: Sizing the sealing element with sizing sleeve

Table 48: Closed groove installation for Turcon® piston seals

Glyd Ring® and seals for similar groove sizes can be installed in closed grooves above the following piston diameters:

O-Ring Series	Material M12, T05, T29, T40, T46	Material M04, T08, T10, Z52	Material Z51, Z80
	D_N (in)	D_N (in)	D_N (in)
000	.312	.591	.787
100	.591	.787	1.378
200	.984	1.378	2.362
300	1.575	1.969	2.953
400	2.362	3.150	4.331
400 H	5.236	5.236	5.906
.331*	9.843	9.843	9.843
.472**	15.748	15.748	15.748

* O-Ring cross section according to SMS 1586.
** The energizer can have a special shape.

INSTALLATION OF TURCON® DOUBLE DELTA®

Installation in closed grooves is possible from .315 inches (8mm) bore diameter. For diameters smaller than 1.968 inches (50mm) a loading mandrel (Figure 63) is recommended. After installation the seal must be calibrated and this may be done with the lead-in chamfer of the cylinder tube or by means of a separate calibration sleeve.

Turcon® piston seals can be installed more easily by heating to approx. 176 °F to 212 °F (80 °C to 100 °C) (expanding and then shrinking back to the original form).

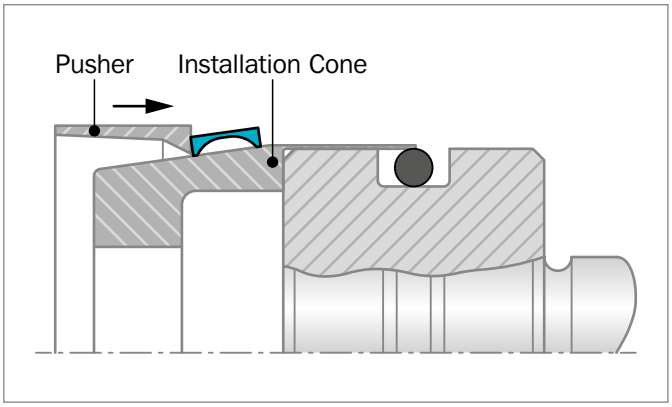

Figure 63: Installation in a closed groove

INSTALLATION OF SPRING-ENERGIZED SEALS

Turcon® Variseal® seals should preferably be installed in split grooves. Installation in half-open grooves is possible with a snap fitting. Figure 64 shows the design of the groove.

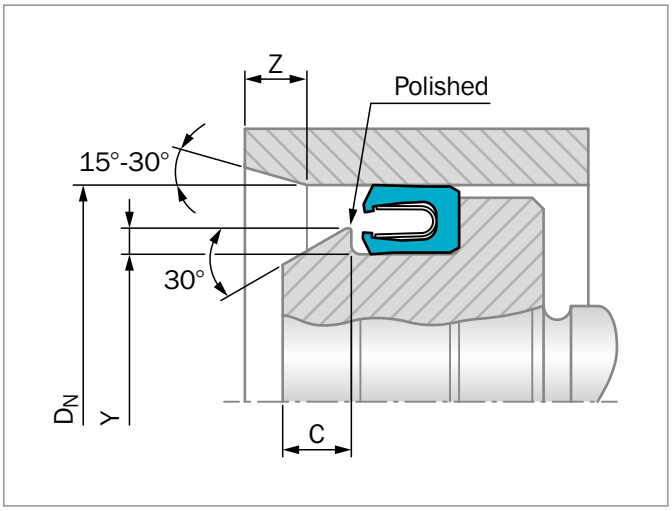

Figure 64: Installation in a half-open groove

Table 49: Installation in Half-Open Grooves

Series No.	D_N min.	Y min.	Z min.	C min.
PVAA	.236	.016	.158	.098
PVAB	.393	.023	.197	.138
PVAC	.629	.027	.197	.138
PVAD	1.102	.031	.295	.178
PVAE	1.772	.035	.472	.295
PVAG	2.559	.059	.472	.295

In exceptional cases or with existing designs, an installation in closed grooves is also possible. The details in Table 50 should be regarded as guide values for installation.

Table 50: Installation in closed grooves

Series No.	D_N min.
PVAA	1.378
PVAB	1.968
PVAC	2.756
PVAD	4.134
PVAE	5.511
PVAG	8.661

INSTALLATION OF THE COMPACT SEAL

The Compact Seal can be installed in one-piece or split pistons. On one-piece pistons, the inner rubber-elastic sealing element is first installed in the middle of the groove diameter by expanding over the piston. Then the cut back-up ring is fitted on both sides of the sealing element and the two cut guide rings are installed.

On split pistons the individual parts are installed in the following order: guide ring, back-up ring, sealing element, back-up ring, guide ring.

Before installation all seal parts, including piston and cylinder, should be oiled or greased.

Double-Acting

O-Ring-Energized Zurcon® Slipper Seal

High static and dynamic sealing effect

Material:
Zurcon® and Elastomer

Zurcon® Wynseal

Description

The Zurcon® Wynseal is a double-acting seal consisting of a special polyurethane seal ring and an O-Ring as energizing element (Figure 65).

The unique characteristic of the seal is the special design of the seal edge profile. Two external seal edges act as a primary seal for pressures from both sides and prevent any build-up of hydrodynamic pressure over the seal profile and the risk of the blow-by effect. The central back-up and sealing bulge increases the sealing effect*. Grooves are provided on both sides of the plane surfaces to provide activation of the energizing O-Ring. These ensure direct pressure loading of the seal under all operating conditions.

Since the installation groove is identical to that for the Turcon® Glyd Ring® , the seal is ideal for the standardization of cylinder construction if efficient and low cost seal elements are demanded in large quantities and the cylinder can be adapted to meet different operating conditions.

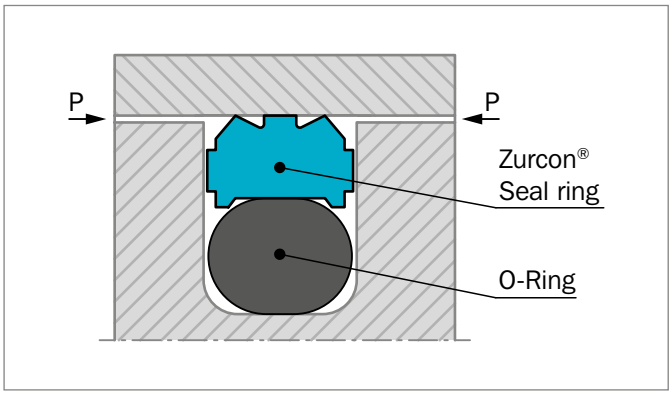

Figure 65: Zurcon® Wynseal

ADVANTAGES

- High static and dynamic sealing effect
- High abrasion resistance
- Simple groove design, one-piece piston possible
- Suitable for grooves to ISO 7425, Part 1

* Because of cross-sectional area constraints, PW10 and PW11 cross sections do not have the center support buldge.

APPLICATION EXAMPLES

The Zurcon® Wynseal is the recommended element for double-acting pistons of hydraulic components in various sectors such as:

- Standard cylinders
- Mobile hydraulics

TECHNICAL DATA

Pressure:	Up to 3,625 psi (25 MPa) (Z20N)
Velocity:	Up to 1.65 ft/s (0.5 m/s)
Temperature:	-31 °F to +230 °F (-35 °C to + 110 °C)
Media:	Mineral oil-based hydraulic fluids

IMPORTANT NOTE

The above data are maximum values and cannot be used at the same time. e.g. the maximum operating speed depends on material type, pressure, temperature and gap value. Temperature range also dependent on medium.

MATERIALS

Standard Materials:

Seal ring: Zurcon® Z20, 93 Shore A

O-Ring: NBR, 70 Shore A N

Set reference: Z20N

Installation Recommendation (Inch Piston Series)

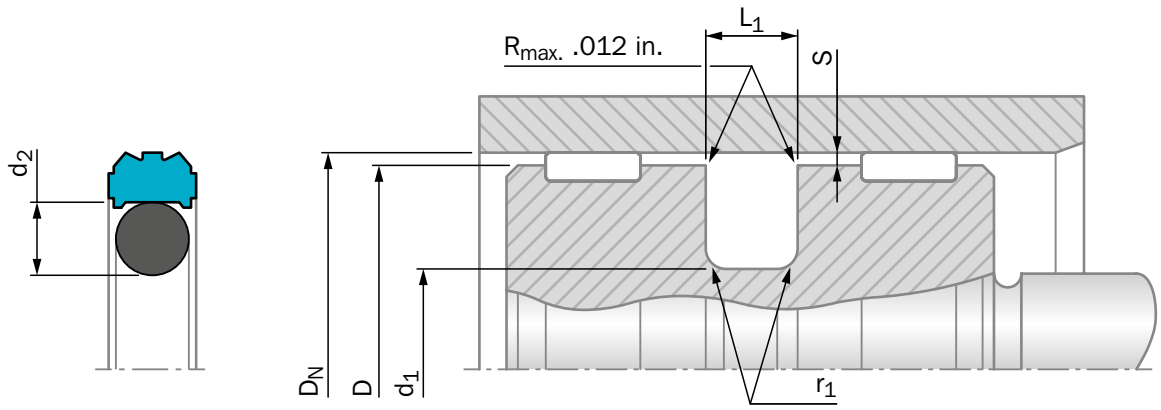

Figure 66: Installation drawing

1) Tolerances used are per ISO-286; ISO System of Limits and Fits. The tolerances are converted from metric and rounded to the nearest three place decimal.
2) The groove diameter h9 tolerance is recommended per ISO-286; ISO System of Limits and Fits. The tolerances are converted from metric and rounded to the nearest three place decimal.
3) The clearance stated as S in the below table are for when the seal is specified with Slydring® bearings. When not incorporating Slydring® bearings, the radial clearance should be reduced.
4) To determine minimum piston diameter D, subtract the diametral clearance (2 x S) from maximum bore diameter D_N.
5) Consult your Trelleborg Sealing Solutions sales office for diameters that exceed those listed in the below table.

Table 51: Installation recommendation

TSS Series No.	Bore Diameter	Groove Diameter	Groove Width	Radius	Radial Clearance	O-Ring Cross Section
	D_N H9	d_1 h9	L_1 +.008	$r_{1\,max}$	S_{max}	d_2
PW10	.375 - .563	D_N -.193	.087	.015	.008	.070
PW11	.563 - 1.563	D_N -.295	.126	.025	.010	.103
PW12	1.563 - 3.125	D_N -.433	.165	.025	.010	.139
PW13	3.125 - 5.250	D_N -.610	.248	.035	.012	.210
PW14	5.250 - 12.500	D_N -.827	.319	.035	.012	.275
PW15	12.500 - 26.000	D_N -.965	.319	.035	.012	.275

ORDERING EXAMPLE

Zurcon® Wynseal for ISO groove

Bore Diameter:	D_N = 3.000 inches
Series No.:	PW12
TSS Part No.:	PW1203000 (from Table 52)
Seal ring Material Code:	Z20
O-Ring Material Code:	N
Set Code:	Z20N

TSS Article No. PW 12 03000 - Z20 N

- TSS Series No. — PW
- Cross Section Series — 12
- Bore Diameter x 1000 — 03000
- Quality Index (Standard) — -
- Material Code (Seal Ring) — Z20
- Material Code (O-Ring) — N

Table 52: Installation dimensions / TSS Part No.

Bore Diameter	Groove Diameter	Groove Width	TSS Part No.
D_N H9	d_1 h9	L_1 +.008	
1.000	**.705**	**.126**	**PW1101000**
1.125	.830	.126	PW1101125
1.250	**.955**	**.126**	**PW1101250**
1.375	1.080	.126	PW1101375
1.500	**1.205**	**.126**	**PW1101500**
1.625	1.192	.165	PW1201625
1.750	**1.317**	**.165**	**PW1201750**
1.875	1.442	.165	PW1201875
2.000	**1.567**	**.165**	**PW1202000**
2.125	1.692	.165	PW1202125
2.250	**1.817**	**.165**	**PW1202250**
2.375	1.942	.165	PW1202375
2.500	**2.067**	**.165**	**PW1202500**
2.750	**2.317**	**.165**	**PW1202750**
3.000	**2.567**	**.165**	**PW1203000**
3.250	**2.640**	**.248**	**PW1303250**
3.500	**2.890**	**.248**	**PW1303500**
3.750	**3.140**	**.248**	**PW1303750**
4.000	**3.390**	**.248**	**PW1304000**
4.250	**3.640**	**.248**	**PW1304250**
4.500	**3.890**	**.248**	**PW1304500**
4.750	**4.140**	**.248**	**PW1304750**
5.000	**4.390**	**.248**	**PW1305000**
5.250	**4.640**	**.248**	**PW1305250**
5.500	**4.673**	**.319**	**PW1405500**
5.750	**4.923**	**.319**	**PW1405750**
6.000	**5.173**	**.319**	**PW1406000**
6.500	**5.673**	**.319**	**PW1406500**
7.000	**6.173**	**.319**	**PW1407000**
7.500	**6.673**	**.319**	**PW1407500**
8.000	**7.173**	**.319**	**PW1408000**
8.500	**7.673**	**.319**	**PW1408500**
9.000	**8.173**	**.319**	**PW1409000**
9.500	8.673	.319	PW1409500
10.000	**9.173**	**.319**	**PW1410000**
10.500	9.673	.319	PW1410500
11.000	**10.173**	**.319**	**PW1411000**
11.500	10.673	.319	PW1411500
12.000	**11.173**	**.319**	**PW1412000**
12.500	11.673	.319	PW1412500
13.000	**12.035**	**.319**	**PW1513000**
13.500	12.535	.319	PW1513500
14.000	**13.035**	**.319**	**PW1514000**
14.500	13.535	.319	PW1514500
15.000	**14.035**	**.319**	**PW1515000**
15.500	14.535	.319	PW1515500
16.000	**15.035**	**.319**	**PW1516000**
16.500	15.535	.319	PW1516500
17.000	**16.035**	**.319**	**PW1517000**
17.500	16.535	.319	PW1517500
18.000	**17.035**	**.319**	**PW1518000**
18.500	17.535	.319	PW1518500
19.000	**18.035**	**.319**	**PW1519000**
19.500	18.535	.319	PW1519500
20.000	**19.035**	**.319**	**PW1520000**

The sizes listed in **bold** font are preferred sizes (more likely to be available for immediate shipment). Other dimensions and all intermediate sizes up to 26 inches (509mm) diameter can be supplied.

Double-acting

Rubber-energized plastic-faced seal

Material:
Turcon®, Zurcon® and Elastomer

Zurcon® Wynseal M

Description

Zurcon® Wynseal M is a modified machined version, of the Zurcon® Wynseal design.

Zurcon® Wynseal M is a double-acting seal consisting of a Zurcon® or Turcon® seal ring and an O-Ring as energizing element – Figure 67.

The seal is designed with a seal edge profile. Two seal edges act as primary seal for pressures from both sides and prevent build-up of hydrodynamic pressure over the seal profile and the risk of blow-by effect. The central sealing and supporting rib increases the sealing effect*.

Radial notches are provided on both sides to provide activation of the energizing O-Ring. These ensure direct pressure loading of the seal under all operating conditions.

Installation groove is identical to that of Turcon® Glyd Ring® .

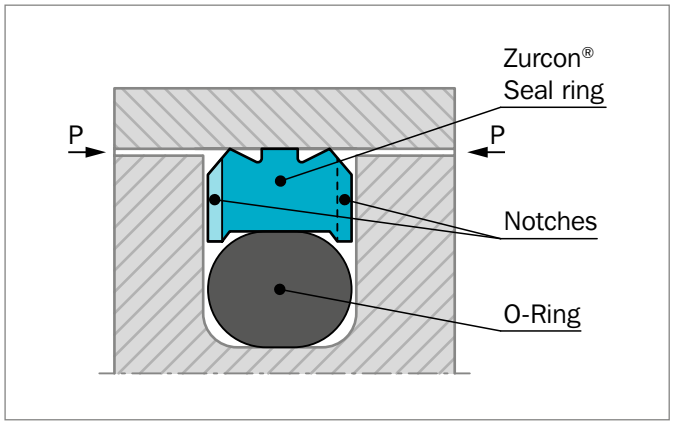

Figure 67: Zurcon® Wynseal M

* Only for the PW82 and the following Series No.: PW80 is without notches and PW81 is without supporting rib.

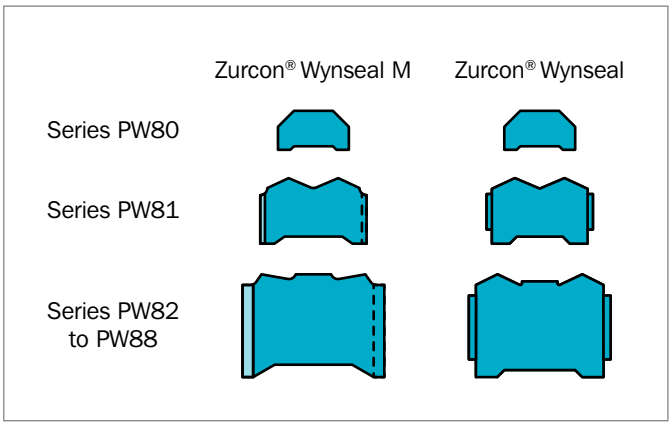

Figure 68: Zurcon® Wynseal M and Zurcon® Wynseal profiles

ADVANTAGES

- High static and dynamic sealing effect
- High abrasion resistance (Zurcon® materials)
- Simple groove design, one-piece piston possible
- Diameter range - from .375 to 102 inches
- Grooves according to ISO 7425-1
- Low friction
- Higher temperature (Turcon® materials)
- Higher pressure
- High chemical resistance

APPLICATION EXAMPLES

Zurcon® Wynseal M is used as double-acting piston seal for hydraulic components in applications such as:

- Standard cylinders
- Mobile hydraulics
- Handling machinery
- Agriculture

TECHNICAL DATA

Pressure:	Up to 7,250 psi (50 MPa)
Speed:	Up to 32.8 ft/s (10 m/s)
Temperature:	-49 °F to +392 °F (-45 °C to +200 °C) depending on seal and O-Ring material
Media:	Mineral oil-based hydraulic fluids, flame retardant hydraulic fluids, environmentally friendly hydraulic fluids (bio-oils), phosphate ester, water and others, depending on temperature, seal and O-Ring material compatibility - see Table 53.
Clearance:	The maximum permissible radial clearance S_{max} is shown in Table 54, as a function of the operating pressure and functional diameter.

IMPORTANT NOTE

The above data are maximum values and cannot be used at the same time, e.g. the maximum operating speed depends on material type, pressure, temperature and gap value. Temperature range also depends on media.

* In the case of unpressurized piston applications in temperatures below 32 °F (0 °C) please contact your local Trelleborg Sealing Solutions marketing company for more information!

INSTALLATION INSTRUCTIONS

Wynseal® M is installed according to information on page 138 to page 141

Closed groove installation according to dimensions in Table 50.

MATERIALS

The following material combinations have proven effective for hydraulic applications:

Zurcon® Wynseal M in Zurcon® Z54
For light to medium hydraulic applications with linear movements in mineral oils and other media with good lubrication:

O-Ring:	NBR 70 Shore A	N
Set code:	Z54N	

Zurcon® Wynseal M in Turcon® M12
All round material for light to heavy hydraulic applications linear, short stroke or helical movements in mineral oils, flame retardant hydraulic fluids, phosphate ester, bio-oils or fluids having low lubricating properties:

O-Ring:	NBR 70 Shore A	N
	FKM 70 Shore A	V
	depending on temperature	
Set code:	M12N or M12V	

For specific applications, all Turcon® materials are available.

Other material combinations are listed in Table 53.

Table 53: Turcon® and Zurcon® Materials for Zurcon® Wynseal M

Material, Applications, Properties	Code	O-Ring Material Shore A	Code	O-Ring Operating Temp.* °F	Mating Surface Material	PSI max. Dyna-mic
Turcon® M12 First material choice for seals in linear motion Overall improved properties For new constructions and updating For all commonly applied hydraulic fluids including fluids with low lubrication performance Lowest friction and best sliding properties Lowest wear on seals Improved absorption of abrasive contaminants Low wear or abrasion of counter surface BAM tested Mineral fiber and Additives filled Color: Dark gray	M12	NBR-70	N	-22 to +212	Steel Steel hardened Cast iron Stainless steel Titanium	5,000
		NBR-70 Low temp.	T	-49 to +176		
		FKM-70	V	+14 to +392		
Turcon® T08 For lubricating fluids and linear motion Very high compressive strength and extrusion resistance Hard counter surfaces is recommended Bronze filled Color: Light to dark brown, which may have variations in shading	T08	NBR-70	N	-22 to +212	Steel hardened Cast iron	7,250
		NBR-70 Low temp.	T	-49 to +176		
		FKM-70	V	+14 to +392		
Turcon® T40 For lubricating and non-lubricating fluids High frequency and short strokes Water hydraulics Surface texture is not suitable for gas sealing Carbon fiber filled Color: Gray	T40	NBR-70	N	-22 to +212	Steel Steel hardened Cast iron Stainless steel Aluminum	3,625
		NBR-70 Low temp.	T	-49 to +176		
		FKM-70	V	+14 to +392		
		EPDM-70	E**	-49 to +293		
Turcon® T46 For lubricated hydraulics in linear motion High compressive strength High extrusion resistance Very good sliding and wear properties BAM tested Bronze filled Color: Light to dark brown, which may have variations in shading	T46	NBR-70	N	-22 to +212	Steel hardened Cast iron	5,000
		NBR-70 Low temp.	T	-49 to +176		
		FKM-70	V	+14 to +392		

Table continues on next page

Material, Applications, Properties	Code	O-Ring Material Shore A	Code	O-Ring Operating Temp.* °F	Mating Surface Material	PSI max. Dyna-mic
Zurcon® Z53* **** For mineral oil based fluids Very high abrasion and extrusion resistance For counter surface with rougher surface finish Limited chemical resistance Max. working temperature 230 °F Color: Yellow to light-brown	Z53	NBR-70	N	-22 to +212	Steel Steel hardened Cast iron Stainless steel Ceramic coating	6,525
		NBR-70 Low temp.	T	-49 to +176		
Zurcon® Z54* **** For mineral oil based fluids High abrasion resistance For counter surface with rougher surface finish Good extrusion resistance Limited chemical resistance Max. working temperature 230 °F Color: Turquoise	Z54	NBR-70	N	-22 to +212	Steel Steel hardened Cast iron	3,625
		NBR-70 Low temp.	T	-49 to +176		
Zurcon® Z80 For lubricating and non-lubricating fluids Water based fluids, air and gases Dry air pneumatics High abrasion and extrusion resistance For service in abrasive conditions and media with particles Good chemical resistance Limited temperature capability (-76 to +176 °F) UHMWPE (Ultra High Molecular Weight Polyethylene) Color: White to off-white	Z80	NBR-70	N	-22 to +212	Steel Steel hardened Stainless steel Aluminum Bronze Ceramic coating	5,000
		NBR-70 Low temp.	T	-49 to +176		
		EPDM-70	E**	-49 to +293		

* The O-Ring Operation Temperature is only valid in mineral hydraulic oil (except EPDM).

** Material not suitable for mineral oils.

*** max. Ø 90 inches (2,300mm).

BAM: Tested by "Bundesanstalt Materialprufung, Germany".

Highlighted materials are recommended.

Installation Recommendation (Inch Piston Series)

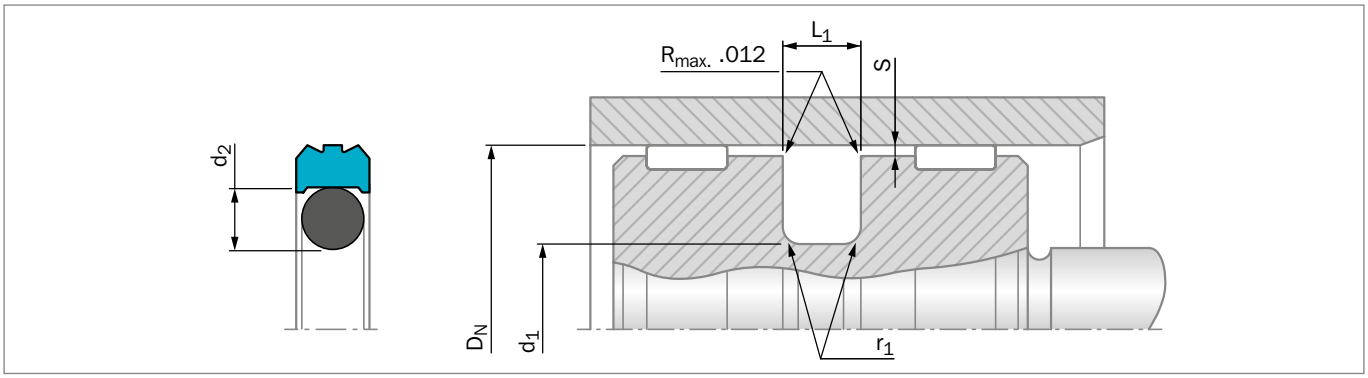

Figure 69: Installation drawing

Table 54: Installation recommendation

TSS Series No.	Bore Diameter	Groove Diameter	Groove Width	Radius	Radial Clearance	O-Ring Cross Section
	D_N H9	d_1 h9	L_1 +.008	$r_{1\ max}$	S_{max}	d_2
PW80	.313 - .562	D_N -.193	.087	.015	.008	.070
PW81	.563 - 1.562	D_N -.295	.126	.025	.010	.103
PW82	1.563 - 3.124	D_N -.433	.165	.025	.010	.139
PW83	3.125 - 5.249	D_N -.610	.248	.035	.012	.210
PW84	5.250 - 12.499	D_N -.827	.319	.035	.012	.275
PW88	12.500 - 26.000	D_N -.965	.319	.035	.012	.275

ORDERING EXAMPLE

Zurcon® Wynseal M complete with O-Ring, standard application:

Series:	PW82 from Table 54
Bore Diameter:	D_N = 3.000 inches
TSS Part No.:	PW8203000 from Table 55

Select the material from Table 53. The corresponding code numbers are appended to the TSS Part No. Together these form the TSS Article Number. The TSS Article Number for all intermediate sizes can be determined by following the example:

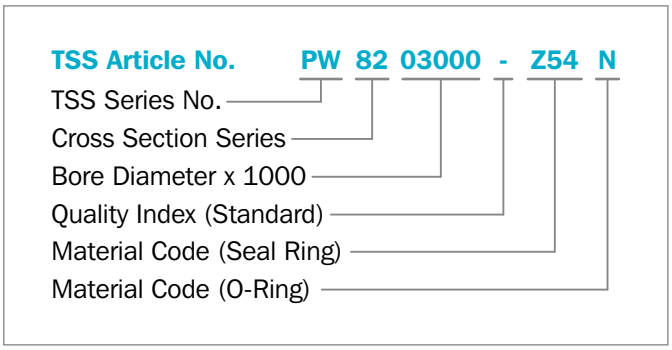

Table 55: Installation dimensions / TSS Part No.

Bore Diameter	Groove Diameter	Groove Width	TSS Part No.
D_N H9	d_1 h9	L_1 +.008	
.375	.182	.087	PW8000375
.500	.307	.087	PW8000500
.625	.330	.126	PW8100625
.750	.455	.126	PW8100750
.875	.580	.126	PW8100875
1.000	.705	.126	PW8101000
1.125	.830	.126	PW8101125
1.250	.955	.126	PW8101250
1.375	1.080	.126	PW8101375
1.500	1.205	.126	PW8101500
1.625	1.192	.165	PW8201625
1.750	1.317	.165	PW8201750
1.875	1.442	.165	PW8201875
2.000	1.567	.165	PW8202000
2.125	1.692	.165	PW8202125
2.250	1.817	.165	PW8202250
2.375	1.942	.165	PW8202375
2.500	2.067	.165	PW8202500
2.750	2.317	.165	PW8202750
3.000	2.567	.165	PW8203000
3.250	2.640	.248	PW8303250
3.500	2.890	.248	PW8303500
3.750	3.140	.248	PW8303750
4.000	3.390	.248	PW8304000
4.250	3.640	.248	PW8304250
4.500	3.890	.248	PW8304500
4.750	4.140	.248	PW8304750
5.000	4.390	.248	PW8305000
5.250	4.423	.319	PW8405250
5.500	4.673	.319	PW8405500
5.750	4.923	.319	PW8405750
6.000	5.173	.319	PW8406000
6.500	5.673	.319	PW8406500
7.000	6.173	.319	PW8407000
7.500	6.673	.319	PW8407500
8.000	7.173	.319	PW8408000
8.500	7.673	.319	PW8408500
9.000	8.173	.319	PW8409000
9.500	8.673	.319	PW8409500
10.000	9.173	.319	PW8410000

Bore Diameter	Groove Diameter	Groove Width	TSS Part No.
D_N H9	d_1 h9	L_1 +.008	
10.500	9.673	.319	PW8410500
11.000	10.173	.319	PW8411000
11.500	10.673	.319	PW8411500
12.000	11.173	.319	PW8412000
12.500	11.535	.319	PW8812500
13.000	12.035	.319	PW8813000
13.500	12.535	.319	PW8813500
14.000	13.035	.319	PW8814000
14.500	13.535	.319	PW8814500
15.000	14.035	.319	PW8815000
15.500	14.535	.319	PW8815500
16.000	15.035	.319	PW8816000
16.500	15.535	.319	PW8816500
17.000	16.035	.319	PW8817000
17.500	16.535	.319	PW8817500
18.000	17.035	.319	PW8818000
18.500	17.535	.319	PW8818500
19.000	18.035	.319	PW8819000
19.500	18.535	.319	PW8819500
20.000	19.035	.319	PW8820000
20.500	19.535	.319	PW8820500
21.000	20.035	.319	PW8821000
21.500	20.535	.319	PW8821500
22.000	21.035	.319	PW8822000
22.500	21.535	.319	PW8822500
23.000	22.035	.319	PW8823000
23.500	22.535	.319	PW8823500
24.000	23.035	.319	PW8824000
24.500	23.535	.319	PW8824500
25.000	24.035	.319	PW8825000
25.500	24.535	.319	PW8825500
26.000	25.035	.319	PW8826000

Double-Acting

O-Ring-Energized Turcon® Slipper Seal

Material:
Turcon®, Zurcon® and Elastomer

Turcon® Glyd Ring® T

Description

The Turcon® Glyd Ring® T is a further technical development of the Turcon® Glyd Ring® seal, which has been successfully used for decades. It is fully interchangeable with the earlier Glyd Ring® seals in all new applications. The Glyd Ring® T meets all the market demands for a function-specific sealing solution, observing economic and ecological aspects.

The benefits of the patented seal concept are provided by the innovative functional principle of the trapezoidal profile cross-section.

Both lateral profile flanks are inclined so that the seal profile tapers towards the seal surface. The profile can thus retain the robust and compact form typical of piston seals without losing any of the flexibility required to achieve a pressure-related maximum compression (Figure 70).

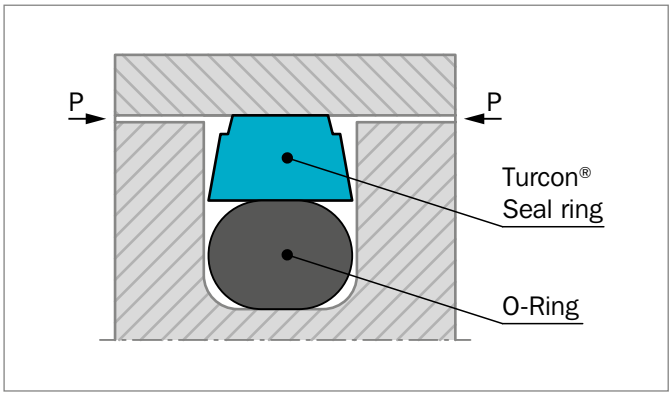

Figure 70: Turcon® Glyd Ring® T

The edge angle created by the special Glyd Ring® T cross-sectional form permits an additional degree of freedom and enables a slight tilting movement of the seal. The maximum compression is always shifted towards the area of the seal edge directly exposed to the pressure. On the low-pressure edge of the seal the Glyd Ring® T exhibits only zones with neutral strains without compressive or shearing loads, effectively reducing the danger of gap extrusion. The resulting benefits for the user can be seen in the following list.

Since the installation groove is identical to that for the Turcon® Glyd Ring® , the seal is ideal for the standardization of cylinder construction if efficient and low cost seal elements are demanded in large quantities and the cylinder can be adapted to meet different operating conditions.

ADVANTAGES

The benefits offered by the Glyd Ring® remain and are now complemented by these further advantages:

- Very good static leak-tightness
- Increased clearance possible (approx. +50%), depending on the operating conditions
- Due to the larger extrusion gap, safe use even with soiled media
- Low friction, no stick-slip effect
- Simple groove design, one-piece pistons possible
- Adaptable to the operating conditions due to a wide range of possible materials (Turcon® , Zurcon®)
- Suitable for new environmentally safe hydraulic fluids
- Available for all cylinder diameters up to 106 inches (2,700mm)

APPLICATION EXAMPLES

The Turcon® Glyd Ring® T is the recommended sealing element for double-acting pistons of hydraulic components such as:

- Mobile hydraulics
- Standard cylinders
- Machine tools
- Injection molding machines
- Presses
- Automotive industry

It is particularly recommended for heavy duty and large diameter applications.

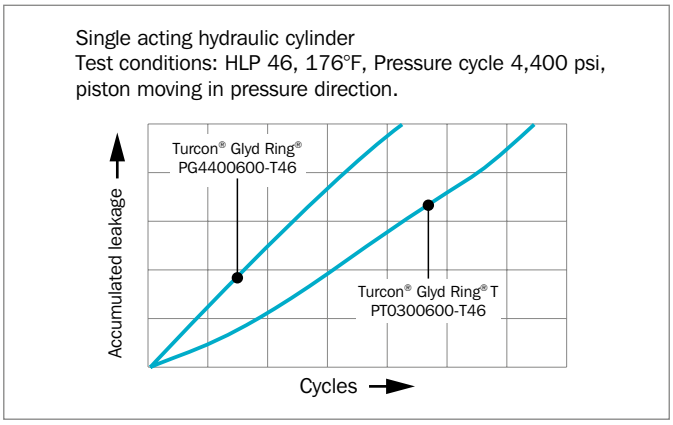

Figure 71: Dynamic leakage Turcon® Glyd Ring® T/ Turcon® Glyd Ring® as single acting piston seal

TECHNICAL DATA

Operating conditions

Pressure:	Up to 8,700 psi (60 MPa)
Velocity:	Up to 50 ft/s (15 m/s)
Temperature:	-49 °F to +392 °F (-45 °C to +200 °C)* (depending on O-Ring material)
Media:	Mineral oil-based hydraulic fluids, barely flammable hydraulic fluids, environmentally safe hydraulic fluids (bio-oils), water, air and others, depending on the O-Ring material (see Table 56)
Clearance:	The maximum permissible radial clearance S_{max} is shown in Table 57, as a function of the operating pressure and functional diameter.

IMPORTANT NOTE

The above data are maximum values and cannot be used at the same time. e.g. the maximum operating speed depends on material type, pressure, temperature and gap value. Temperature range also dependent on medium.

* In the case of unpressurized applications in temperatures below 32 °F (0 °C) please contact our application engineers for assistance!

MATERIALS

Standard Application:
For hydraulic components with reciprocating movement in mineral oils containing zinc or medium with good lubricating performance

Seal ring: Turcon® T46

Energizer: NBR, 70 Shore A N
FKM, 70 Shore A V
depending on temperature

Set reference: T46N or T46V

Special Application:
Non-lubricating fluids or pneumatic applications require self-lubricating sealing materials. Therefore we recommend:

Seal ring: Turcon® T40

Energizer: NBR, 70 Shore A N
FKM, 70 Shore A V
depending on temperature

Set reference: T40N or T40V

If rougher surface finish must be sealed, we recommend:

Seal ring: Zurcon® Z53

Energizer: NBR, 70 Shore A N

Set reference: Z53N

Table 56: Turcon® and Zurcon® Materials for Glyd Ring® T

Material, Applications, Properties	Code	O-Ring Material Shore A	Code	O-Ring Operating Temp.* °F	Mating Surface Material	PSI Max.
Turcon® M12 First material choice for seals in linear motion Overall improved properties For new and updated applications For all commonly used hydraulic fluids including fluids with low lubrication performance Lowest friction and best sliding properties Lowest wear on seals Improved absorption of abrasive contaminants Low wear or abrasion of counter surface Mineral fiber and additives fillers Color: Dark gray	M12	NBR-70	N	-22 to +212	Steel Steel hardened Steel chrome plated (rod) Steel plated (rod) Cast iron Stainless steel Titanium	7,250
		NBR-70 Low temp.	T	-49 to +176		
		FKM-70	V	+14 to +392		
Turcon® T46 Standard material for hydraulics, high compressive strength, good sliding and wear properties, good extrusion resistance BAM tested Bronze filled Color: Grayish to dark brown	T46	NBR-70	N	-22 to +212	Steel hardened Steel chrome plated Cast iron	7,250
		NBR-70 Low temp.	T	-49 to +176		
		FKM-70	V	+14 to +392		
Turcon® T40 For all lubricating and non-lubricating hydraulic fluids, hydraulic oils without zinc, water hydraulic, soft mating surfaces, good extrusion resistance Surface texture not suitable for gases Carbon fiber-filled Color: Gray	T40	NBR-70	N	-22 to +212	Steel Steel chrome plated Cast iron Stainless steel Aluminum Bronze Alloys	3,625
		NBR-70 Low temp.	T	-49 to +176		
		FKM-70	V	+14 to +392		
		EPDM-70	E**	-49 to +293		
Zurcon® Z53*** For lubricating hydraulic fluids, high abrasion resistance, high extrusion resistance,limited chemical resistance Color: Yellow to light-brown	Z53	NBR-70	N	-22 to +212	Steel Steel chrome plated Cast iron Ceramic coating Stainless steel	8,700
		NBR-70 Low temp.	T	-49 to +176		

* The O-Ring operation temperature is only valid in mineral hydraulic oil.

** Material not suitable for mineral oils.

*** max. Ø 102 inches (2,600mm)

BAM: Tested by "Bundesanstalt Materialprüfung, Germany"

Highlighted materials are standard.

Installation Recommendation (Inch Piston Series)

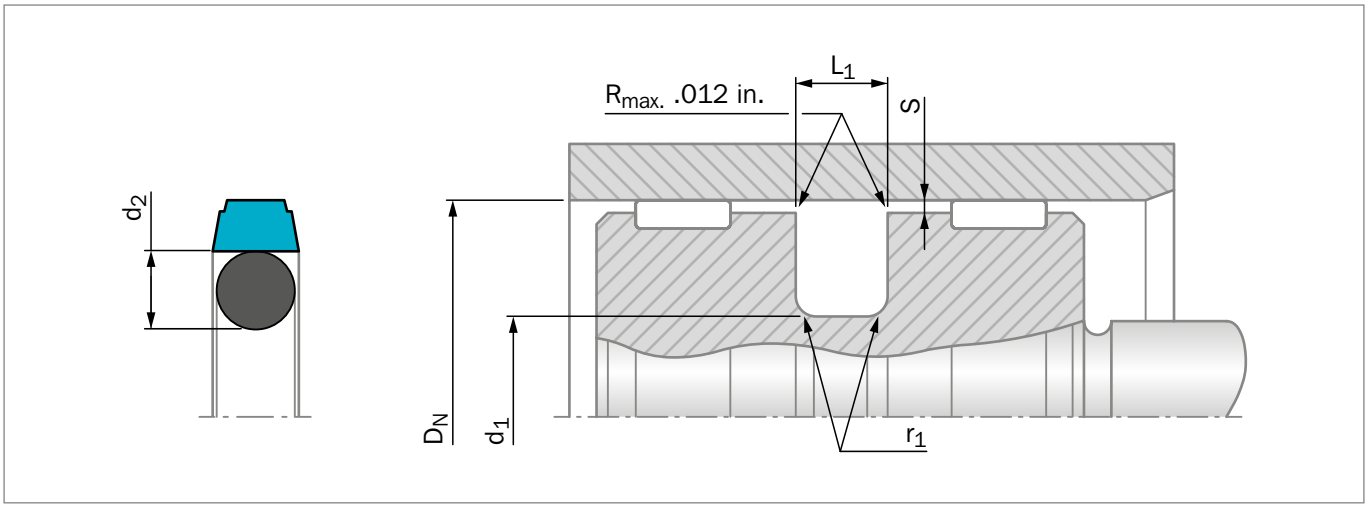

Figure 72: Installation drawing

Table 57: Installation recommendation

TSS Series No.	Bore Diameter D_N H9			Groove Diameter	Groove Width	Radius	Radial Clearance $S_{max.}$*			O-Ring Cross-Section
	Standard Application	Light Application	Heavy Duty Application	d_1 h9	L_1 +.008	$r_{1\,max}$	10 MPa 1500 psi	20 MPa 3000 psi	40 MPa 5800 psi	d_2
PT10	.312 - .562	.625 - 1.500	–	D_N -.193	.087	.015	.020	.012	.008	.070
PT11	.562 - 1.563	1.563 - 3.125	–	D_N -.295	.126	.025	.024	.016	.008	.103
PT12	1.563 - 3.125	3.125 - 5.250	.560 - 1.563	D_N -.433	.165	.025	.024	.016	.008	.139
PT13	3.125 - 5.250	5.250 - 12.500	1.563 - 3.125	D_N -.610	.248	.035	.031	.020	.012	.210
PT14	5.250 - 12.500	12.500 - 26.000	3.125 - 5.250	D_N -.827	.319	.035	.031	.020	.012	.275
PT15	12.500 - 26.000	–	5.250 - 12.500	D_N -.965	.319	.035	.035	.020	.016	.275

* At pressures >**40 MPa (5.800 psi)** use diameter tolerance H8/f8 (bore/piston) in area of the seal. The radial clearance is valid for material Turcon® T46 at +140 °F (+60 °C).

ORDERING EXAMPLE

Turcon® Glyd Ring® T, complete with O-Ring, standard application, series PT12 (from Table 57)

Bore diameter:	D_N = 3.000 inches
TSS Part No.:	PT1203000 (from Table 58)

Select the material from Table 56. The corresponding code numbers are appended to the TSS Part No. (from Table 58). Together they form the TSS Article No.
For all intermediate sizes not shown in Table 58, the TSS Article No. can be determined from the example opposite.

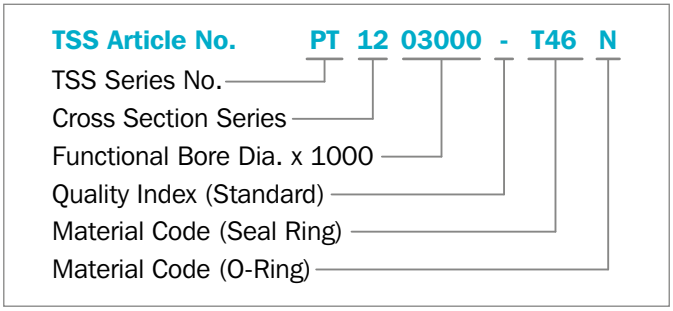

*** For diameters ≥100.000 inches please consult your Trelleborg Sealing Solutions sales office for special part no.

NOTE

Turned - other diameters also available, no tool costs.

Table 58: Installation dimensions / TSS Part No.

Bore Diameter	Groove Diameter	Groove Width	TSS Part No.
D_N H9	d_1 h9	L_1 +.008	
.500	.307	.087	PT1000500
.563	.370	.087	PT1000563
.625	.330	.126	PT1100625
.688	.393	.126	PT1100688
.750	.455	.126	PT1100750
.813	.518	.126	PT1100813
.875	.580	.126	PT1100875
.938	.643	.126	PT1100938
1.000	**.705**	**.126**	**PT1101000**
1.063	.768	.126	PT1101063
1.125	.830	.126	PT1101125
1.188	.893	.126	PT1101188
1.250	**.955**	**.126**	**PT1101250**
1.313	1.018	.126	PT1101313
1.375	1.080	.126	PT1101375
1.438	1.143	.126	PT1101438
1.500	**1.205**	**.126**	**PT1101500**
1.563	1.268	.126	PT1101563
1.625	1.192	.165	PT1201625
1.688	1.255	.165	PT1201688
1.750	**1.317**	**.165**	**PT1201750**
1.813	1.380	.165	PT1201813
1.875	1.442	.165	PT1201875
1.938	1.505	.165	PT1201938
2.000	**1.567**	**.165**	**PT1202000**
2.125	1.692	.165	PT1202125
2.250	**1.817**	**.165**	**PT1202250**
2.375	1.942	.165	PT1202375
2.500	**2.067**	**.165**	**PT1202500**
2.625	2.193	.165	PT1202625
2.750	**2.317**	**.165**	**PT1202750**
2.875	2.442	.165	PT1202875
3.000	**2.567**	**.165**	**PT1203000**
3.125	2.692	.165	PT1203125
3.250	**2.640**	**.248**	**PT1303250**
3.375	2.765	.248	PT1303375
3.500	**2.890**	**.248**	**PT1303500**
3.625	3.015	.248	PT1303625
3.750	**3.140**	**.248**	**PT1303750**
3.875	3.265	.248	PT1303875

Bore Diameter	Groove Diameter	Groove Width	TSS Part No.
D_N H9	d_1 h9	L_1 +.008	
4.000	**3.390**	**.248**	**PT1304000**
4.125	3.515	.248	PT1304125
4.250	**3.640**	**.248**	**PT1304250**
4.375	3.765	.248	PT1304375
4.500	**3.890**	**.248**	**PT1304500**
4.625	4.015	.248	PT1304625
4.750	**4.140**	**.248**	**PT1304750**
4.875	4.265	.248	PT1304875
5.000	**4.390**	**.248**	**PT1305000**
5.125	4.515	.248	PT1305125
5.250	**4.640**	**.248**	**PT1305250**
5.375	4.548	.319	PT1405375
5.500	**4.673**	**.319**	**PT1405500**
5.625	4.798	.319	PT1405625
5.750	**4.923**	**.319**	**PT1405750**
6.000	**5.173**	**.319**	**PT1406000**
6.250	5.423	.319	PT1406250
6.500	**5.673**	**.319**	**PT1406500**
6.750	5.923	.319	PT1406750
7.000	**6.173**	**.319**	**PT1407000**
7.250	6.423	.319	PT1407250
7.500	**6.673**	**.319**	**PT1407500**
7.750	6.923	.319	PT1407750
8.000	**7.173**	**.319**	**PT1408000**
8.250	7.423	.319	PT1408250
8.500	**7.673**	**.319**	**PT1408500**
8.750	7.923	.319	PT1408750
9.000	**8.173**	**.319**	**PT1409000**
9.250	8.423	.319	PT1409250
9.500	**8.673**	**.319**	**PT1409500**
9.750	8.923	.319	PT1409750
10.000	**9.173**	**.319**	**PT1410000**
10.500	9.673	.319	PT1410500
11.000	**10.173**	**.319**	**PT1411000**
11.500	10.673	.319	PT1411500
12.000	**11.173**	**.319**	**PT1412000**
12.500	11.673	.319	PT1412500
13.000	**12.035**	**.319**	**PT1513000**
13.500	12.535	.319	PT1513500
14.000	**13.035**	**.319**	**PT1514000**

Bore Diameter	Groove Diameter	Groove Width	TSS Part No.
D_N H9	d_1 h9	L_1 +.008	
14.500	13.535	.319	PT1514500
15.000	**14.035**	**.319**	**PT1515000**
15.500	14.535	.319	PT1515500
16.000	**15.035**	**.319**	**PT1516000**
16.500	15.535	.319	PT1516500
17.000	**16.035**	**.319**	**PT1517000**
17.500	16.535	.319	PT1517500
18.000	**17.035**	**.319**	**PT1518000**
18.500	17.535	.319	PT1518500
19.000	**18.035**	**.319**	**PT1519000**
19.500	18.535	.319	PT1519500
20.000	**19.035**	**.319**	**PT1520000**

The sizes listed in **bold** font are preferred sizes (more likely to be available for immediate shipment). Other dimensions and all intermediate sizes up to 106 inches (2700mm) diameter can be supplied.

Double-Acting

Elastomer-Energized Zurcon® Slipper Seal

Step Cut Sealing Element

Material:
Zurcon® and Elastomer

Zurcon® Glyd Ring® P (ISO)

Description

The double-acting Zurcon® Glyd Ring® P is a combination of a Zurcon® -based slipper seal with a step cut and an energizing rectangular elastomeric ring. It is produced with an interference fit at closed step cut which together with the squeeze of the rectangular energizer ring ensures a good sealing effect even at low pressure.

At higher system pressures, the rectangular ring is energized by the fluid, pushing the Zurcon® Glyd Ring® P against the sealing face with increased force. At high peak pressures, the Zurcon® step cut seal ring can follow ballooning of the tube without losing the sealability.

Due to the Zurcon® high strength plastic material, two times bigger extrusion gaps are possible compared with Turcon® materials. The step cut in the ring is necessary for installation in closed grooves and for the flexibility of the seal ring due to the high stiffness of the material.

Since the installation groove is identical to that for the Turcon® Glyd Ring® , the seal is ideal for the standardization of cylinder construction if efficient and low cost seal elements are demanded in large quantities and the cylinder can be adapted to meet different operating conditions.

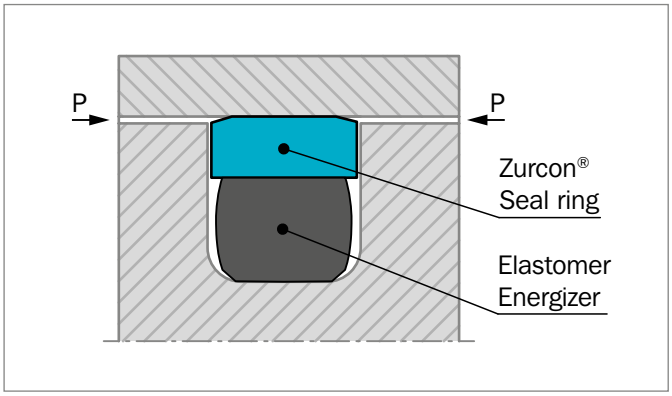

Figure 73: Zurcon® Glyd Ring® P

STEP CUT

For easy installation on the piston and for the flexibility of the seal ring a precision step cut is produced by special tool technology.

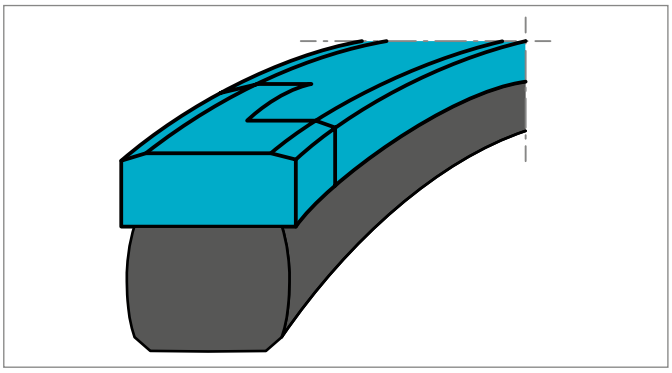

Figure 74: Step cut on Zurcon® Glyd Ring® P

ADVANTAGES

- Easy installation on piston without special tools
- Due to large extrusion gap, safe use even with soiled media
- Installation grooves acc. to ISO 7425/1
- Simple groove design, one piece piston possible
- Increased clearance compared to Turcon® Glyd Ring® seals (approx. +50%), depending on operation conditions
- Resistent against shock loads
- High wear resistant material ensures long service life

APPLICATION EXAMPLES

- Mobile hydraulics
- Construction machinery
- Agriculture machinery

It is particularly recommended for heavy duty applications

TECHNICAL DATA

Operating conditions:
The Zurcon® Glyd Ring® P is recommended for reciprocating (with a length of stroke at least twice the groove width) movements where the dimensional gap between piston and tube is as big as possible or where high pressure peaks occur during operation.

Pressure:	7,250 psi (50 MPa) standard
Velocity:	Up to 3.3 ft/s (1 m/s)
Temperature:	-40 °F to +230 °F (-40 °C to +110 °C)
Media:	mineral oil-based hydraulic fluids

IMPORTANT NOTE

The above data are maximum values and cannot be used at the same time. e.g. the maximum operating speed depends on material type, pressure, temperature and gap value. Temperature range also dependent on medium.

MATERIALS

Standard Application:
For hydraulic components in mineral oils or media with good lubricating performance

Seal ring: Zurcon® Z66

Energiser: NBR, 70 Shore A N

Set reference: Z66N

Low Temperature Application:

Seal ring: Zurcon® Z66

Energiser: NBR, 70 Shore A (low temp) T

Set reference: Z66T

High Temperature Application:

Seal ring: Zurcon® Z66

Energiser: FKM, 70 Shore A V

Set reference: Z66V

Installation Recommendation (Inch Piston Series)

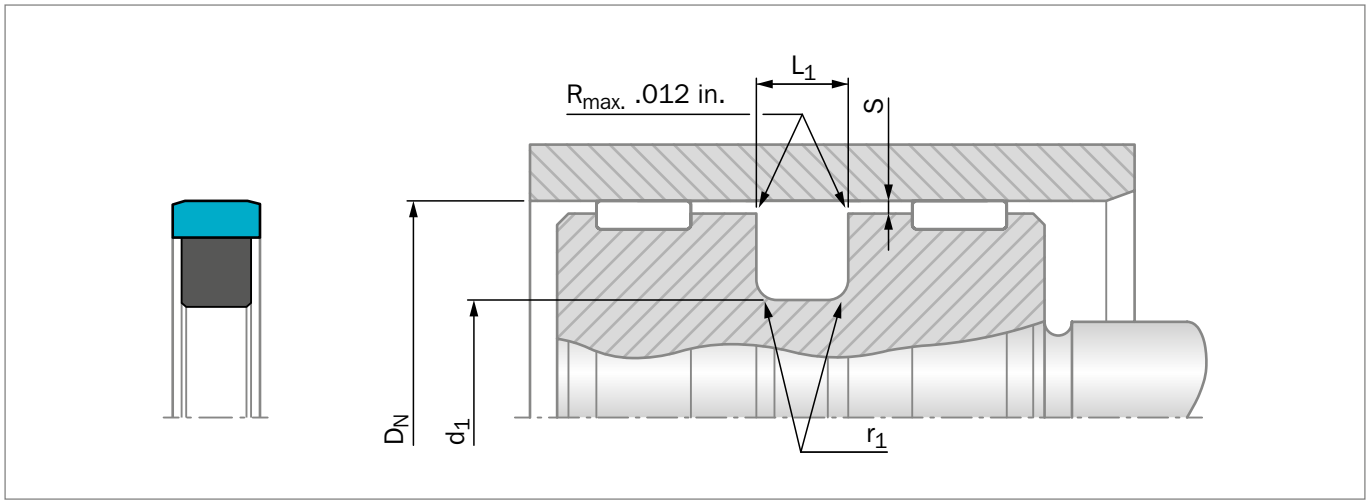

Figure 75: Installation drawing

Table 59: Installation recommendation

TSS Series No.	Bore Diameter	Groove Diameter	Groove Width	Radius	Radial Clearance
	D_N H9	d_1 h9	L_1 +.008	$r_{1\ max}$	S_{max}
PGP2	1.250 - 3.249	D_N -.433	.165	.020	.014
PGP3	3.250 - 5.000	D_N -.610	.248	.035	.020

ORDERING EXAMPLE

Zurcon® Glyd Ring® P for ISO groove

TSS Series No.:	PGP2
TSS Part No.:	PGP200762
TSS Seal Ring Material Code:	Z66
Energizer material code:	N
Set code:	Z66N

TSS Article No. PGP 2 00762 - Z66 N

- TSS Series No. — PGP
- Cross Section Series — 2
- Bore Diameter x 1000 — 00762
- Quality Index (Standard) — -
- Material Code (Seal Ring) — Z66
- Material Code (O-Ring) — N

Table 60: Installation dimensions / TSS Part No.

Bore Diameter	Groove Diameter	Groove Width	TSS Part No.
D_N H9	d_1 h9	L_1 +.008	
1.250	**.820**	**.165**	**PGP200318**
1.500	**1.067**	**.165**	**PGP200381**
1.750	**1.317**	**.165**	**PGP200445**
2.000	**1.567**	**.165**	**PGP200508**
2.250	**1.817**	**.165**	**PGP200572**
2.500	**2.067**	**.165**	**PGP200635**
2.750	**2.317**	**.165**	**PGP200700**
3.000	**2.567**	**.165**	**PGP200762**
3.250	**2.640**	**.248**	**PGP300826**
3.500	**2.890**	**.248**	**PGP300889**
3.750	**3.140**	**.248**	**PGP300953**
4.000	**3.390**	**.248**	**PGP301016**
4.250	**3.640**	**.248**	**PGP301080**
4.500	**3.890**	**.248**	**PGP301143**
4.750	**4.140**	**.248**	**PGP301207**
5.000	**4.390**	**.248**	**PGP301270**

The sizes listed in **bold** font are preferred sizes (more likely to be available for immediate shipment). Other dimensions and all intermediate sizes up to 10 inches (254mm) diameter can be supplied.

Double-Acting

O-Ring-Energized Turcon® Slipper Seal

Material:
Turcon® , Zurcon® and Elastomer

Turcon® Glyd Ring®

Description

Successfully used for decades, the Turcon® Glyd Ring® is a very effective and reliable low frictional seal. It is particularly suitable as a piston seal in both high and low pressure systems.

The double-acting Turcon® Glyd Ring® is a combination of a Turcon® -based slipper seal and an energizing O-Ring. It is produced with an interference fit which together with the squeeze of the O-Ring ensures a good sealing effect even at low pressure. At higher system pressures, the O-Ring is energized by the fluid, pushing the Turcon® Glyd Ring® against the sealing face with increased force.

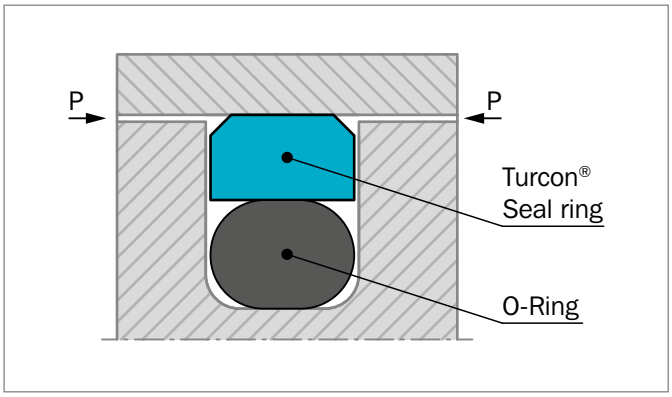

Figure 76: Turcon® Glyd Ring®

The geometry of the Turcon® Glyd Ring® ensures a good static sealing and allows the lubricating hydrodynamic oil film to be built under the seal in reciprocating applications.

Since the installation groove is identical to that of other seals, the Turcon® Glyd Ring® seal is ideal for the standardization of cylinder construction if efficient and low cost seal elements are demanded in large quantities and the cylinder can be adapted to meet different operating conditions.

ADVANTAGES

- No stick-slip effect when starting for smooth operation
- Minimum static and dynamic friction coefficient for a minimum energy loss and lower operating temperature
- Suitable for non-lubricating fluids depending on seal material for optimum design flexibility
- High wear resistance ensures long service life
- No adhesive effect to the mating surface during long period of inactivity or storage
- Suitable for most hydraulic fluids in relation to most modern hardware materials and surface finishes depending on material selected
- Suitable for new environmentally safe hydraulic fluids
- Available for all cylinder diameters up to 106 inches (2,700mm)

APPLICATION EXAMPLES

Over several decades the Turcon® Glyd Ring® has been successfully implemented as a double-acting piston seal for hydraulic components. Examples include:

- Mobile hydraulics
- Machine tools
- Injection molding machines
- Presses

Valves for hydraulic & pneumatic circuits

TECHNICAL DATA

Operating conditions:
The Turcon® Glyd Ring® is recommended for reciprocating (with a length of stroke at least twice the groove width) and helical movements.

Pressure:	Up to 8,700 psi (60 MPa)
Velocity:	Up to 50 ft/s (15 m/s)
Frequency:	Up to 5 Hz.
Temperature:	-49° F to +392 °F (-45 °C to +200 °C)* (depending on O-Ring material)
Media:	Mineral oil-based hydraulic fluids, barely flammable hydraulic fluids, environmentally safe hydraulic fluids (biological degradable oils), water, air and others. This depends on the O-Ring material compatibility.
Clearance:	The maximum permissible radial clearance S_{max} is shown in the Table 62 as a function of the operating pressure and functional diameter.

IMPORTANT NOTE

The above data are maximum values and cannot be used at the same time. e.g. the maximum operating speed depends on material type, pressure, temperature and gap value. Temperature range also dependent on medium.

* In the case of unpressurized applications in temperatures below 32 °F (0 °C) please contact our application engineers for assistance!

MATERIALS

Standard Applications:
For hydraulic components in mineral oils containing zinc or medium with good lubricating performance:

Seal ring: Turcon® T46

Energizer: NBR, 70 Shore A N
FKM, 70 Shore A V
depending on temperature

Set reference: T46N or T46V

Special Applications:
Short stroke movements, non-lubricating fluids or pneumatic applications require self-lubricating sealing materials. Therefore we recommend:

Seal ring: Turcon® T29

Energizer: NBR, 70 Shore A N
FKM, 70 Shore A V
depending on temperature

Set reference: T29N or T29V

If low friction coefficient is required, we recommend:

Seal ring: Turcon® T05

Energizer: NBR, 70 Shore A N
FKM, 70 Shore A V
depending on temperature
For special requirements, other elastomers are available on request.

Set reference: T05N or T05V

If rougher surface finish must be sealed, we recommend:

Seal ring: Zurcon® Z53

Energizer: NBR, 70 Shore A N

Set reference: Z53N

Table 61: Turcon® and Zurcon® Materials for Glyd Ring®

Material, Applications, Properties	Code	O-Ring Material Shore A	Code	O-Ring Operating Temp.* °F	Mating Surface Material	PSI Max.
Turcon® M12 First material choice for seals in linear motion Overall improved properties For new constructions and updating For all commonly applied hydraulic fluids including fluids with low lubrication performance Lowest friction and best sliding properties Lowest wear on seals Improved absorption of abrassive contaminants Low wear or abrasion of counter surface BAM tested Mineral fiber and additives filled Color: Dark gray	M12	NBR-70	N	-22 to +212	Steel Steel hardened Steel chrome plated (rod) Steel plated (rod) Cast iron Stainless steel Titanium	7,250
		NBR-70 Low temp.	T	-49 to +176		
		FKM-70	V	+14 to +392		
Turcon® T46 Standard material for hydraulics, high compressive strength, good sliding and wear properties, good extrusion resistance BAM tested Bronze filled Color: Grayish to dark brown	T46	NBR-70	N	-22 to +212	Steel hardened Steel chrome plated Cast iron	7,250
		NBR-70 Low temp.	T	-49 to +176		
		FKM-70	V	+14 to +392		
Turcon® T08 Very high compressive strength, very good extrusion resistance High bronze filled Color: Light to dark brown	T08	NBR-70	N	-22 to +212	Steel hardened Steel chrome plated Cast iron	8,700
		NBR-70 Low temp.	T	-49 to +176		
		FKM-70	V	+14 to +392		
Turcon® T40 For all lubricating and non-lubricating hydraulic fluids, hydraulic oils without zinc, water hydraulic, soft mating surfaces Surface texture not suitable for gases Carbon fiber filled Color: Gray	T40	NBR-70	N	-22 to +212	Steel Steel chrome plated Cast iron Stainless steel Aluminum Bronze Alloys	3,625
		NBR-70 Low temp.	T	-49 to +176		
		FKM-70	V	+14 to +392		
		EPDM-70	E**	-49 to +293		
Turcon® T29 For all lubricating and non-lubricating hydraulic fluids, hydraulic oils without zinc, soft mating surfaces, good extrusion resistance Surface texture not suitable for gases High carbon fiber filled Color: Gray	T29	NBR-70	N	-22 to +212	Steel Steel chrome plated Cast iron Stainless steel Aluminium Bronze	4,350
		NBR-70 Low temp.	T	-49 to +176		
		FKM-70	V	+14 to +392		
		EPDM-70	E**	-49 to +293		

Table continues on next page

Material, Applications, Properties	Code	O-Ring Material Shore A	Code	O-Ring Operating Temp.* °F	Mating Surface Material	PSI Max.
Turcon® T05 For all lubricating hydraulic fluids, hard mating surfaces, very good slide properties, low friction. Color: Turquoise	T05	NBR-70	N	-22 to +212	Steel hardened Steel chrome plated	2,900
		NBR-70 Low temp.	T	-49 to +176		
		FKM-70	V	+14 to +392		
Turcon® T42 For all lubricating and non-lubricating hydraulic fluids, good chemical resistance, good dielectric properties Glass fiber filled + MoS_2 Color: Gray to blue	T42	NBR-70	N	-22 to +212	Steel hardened Steel chrome plated Cast iron	5,800
		NBR-70 Low temp.	T	-49 to +176		
		FKM-70	V	+14 to +392		
Turcon® T19 For all lubricating fluids and hydraulic oils without zinc, high sealing efficiency, good sliding and wear properties, mild to counter surface Mineral fiber filled Color: Dark green-gray	T19	NBR-70	N	-22 to +212	Steel Steel hardened Steel chrome plated Cast iron Stainless steel	5,000
		NBR-70 Low temp.	T	-49 to +176		
		FKM-70	V	+14 to +392		
Zurcon® Z53*** For lubricating hydraulic fluids, high abrasion resistance, high extrusion resistance, limited chemical resistance Color: Yellow to light-brown	Z53	NBR-70	N	-22 to +212	Steel Steel chrome plated Cast iron Ceramic coating Stainless steel	8,700
		NBR-70 Low temp.	T	-49 to +176		
Zurcon® Z80 For lubricating and non-lubricating hydraulic fluids, high abrasion resistance, very good chemical resistance, limited temp. resistance Ultra high molecular weight polyethylene Color: White to off-white	Z80	NBR-70	N	-22 to +176	Steel Steel chrome plated Stainless steel Aluminum Bronze Ceramic coating	5,075
		NBR-70 Low temp.	T	-49 to +176		

* The O-Ring operation temperature is only valid in mineral hydraulic oil.

** Material not suitable for mineral oils.

*** max. Ø 102 inches (2,600mm).

BAM: Tested by "Bundesanstalt Materialprüfung, Germany".

Highlighted materials are standard.

Installation Recommendation (Inch Piston Series)

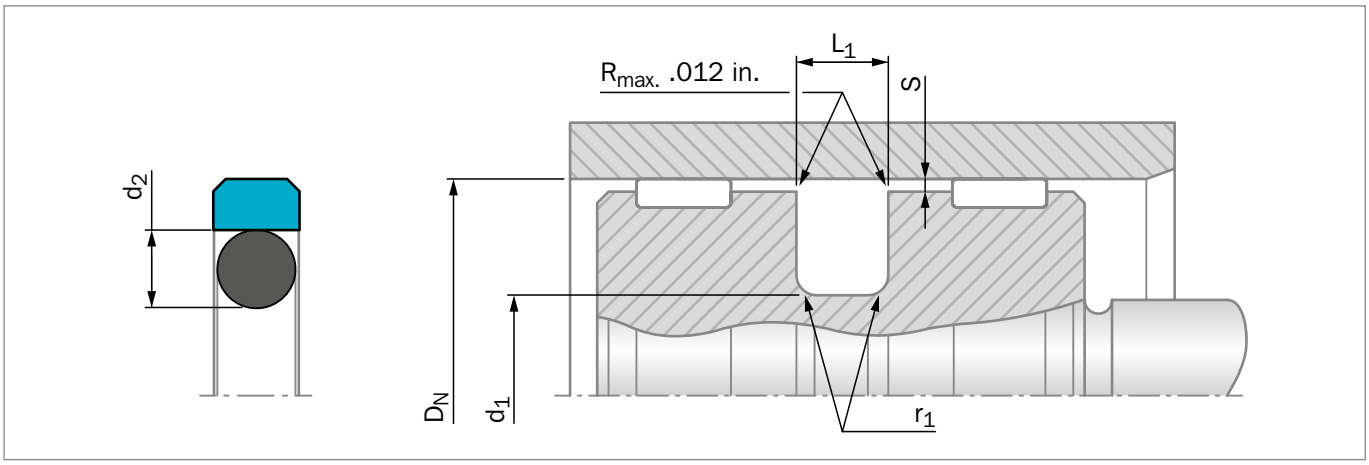

Figure 77: Installation drawing

Table 62: Installation recommendation

TSS Series No.	Bore Diameter D_N H9			Groove Diameter	Groove Width	Radius	Radial Clearance S_{max}*			O-Ring Cross-Section
	Standard Application	Light Application	Heavy Duty Application	d_1 h9	L_1 +.008	$r_{1\,max}$	10 MPa 1500 psi	20 MPa 3000 psi	40 MPa 5800 psi	d_2
PG00	.312 - .562	.625 - 1.500	-	D_N -.193	.087	.015	.020	.012	.008	.070
PG01	.562 - 1.563	1.563 - 3.125	-	D_N -.295	.126	.025	.024	.016	.008	.103
PG02	1.563 - 3.125	3.125 - 5.250	.562 - 1.563	D_N -.433	.165	.025	.024	.016	.008	.139
PG03	3.125 - 5.250	5.250 - 12.500	1.563 - 3.125	D_N -.610	.248	.035	.031	.020	.012	.210
PG04	5.250 - 12.500	12.500 - 26.000	3.125 - 5.250	D_N -.827	.319	.035	.031	.020	.012	.275
PG05	12.500 - 26.000	-	5.250 - 12.500	D_N -.965	.319	.035	.035	.020	.012	.275

* At pressures >**40 MPa (5,800 psi)** use diameter tolerance H8/f8 (bore/piston) in area of the seal.

ORDERING EXAMPLE

Turcon® Glyd Ring® , complete with O-Ring, standard application, Series PG02 (from Table 62)

Bore Diameter:	D_N = 2.500 inches
TSS Part No.:	PG0202500 (from Table 63)

Select the material from Table 61. The corresponding code numbers are appended to the TSS Part No. Preferred Series (Table 63). Together they form the TSS Article Number. The TSS Article Number for all intermediate sizes not shown in Preferred Series (Table 63) can be determined following the example opposite.

TSS Article No. PG 0 2 02500 - T46 N

- TSS Series No. — PG
- 0=std, N=with notches — 0
- Cross Section Size — 2
- Function Bore Diameter x 1000 — 02500
- Quality Index (Standard) — -
- Material Code (Seal Ring) — T46
- Material Code (O-Ring) — N

For diameters D_N ≥100.000 inches please consult your Trelleborg Sealing Solutions sales office for custom article no.

NOTE

Turned - other diameters also available, no tool costs.

Table 63: Installation dimensions / TSS Part No.

Bore Diameter	Groove Diameter	Groove Width	TSS Part No.
D_N H9	d_1 h9	L_1 +.008	
.500	.307	.087	PG0000500
.563	.370	.087	PG0000563
.625	.330	.126	PG0100625
.688	.393	.126	PG0100688
.750	.455	.126	PG0100750
.813	.518	.126	PG0100813
.875	.580	.126	PG0100875
.938	.643	.126	PG0100938
1.000	**.705**	**.126**	**PG0101000**
1.063	.768	.126	PG0101063
1.125	.830	.126	PG0101125
1.188	.893	.126	PG0101188
1.250	**.955**	**.126**	**PG0101250**
1.313	1.018	.126	PG0101313
1.375	1.080	.126	PG0101375
1.438	1.143	.126	PG0101438
1.500	**1.205**	**.126**	**PG0101500**
1.563	1.268	.126	PG0101563
1.625	1.192	.165	PG0201625
1.688	1.255	.165	PG0201688
1.750	**1.317**	**.165**	**PG0201750**
1.813	1.380	.165	PG0201813
1.875	1.442	.165	PG0201875
1.938	1.505	.165	PG0201938
2.000	**1.567**	**.165**	**PG0202000**
2.125	1.692	.165	PG0202125
2.250	**1.817**	**.165**	**PG0202250**
2.375	1.942	.165	PG0202375
2.500	**2.067**	**.165**	**PG0202500**
2.626	2.193	.165	PG0202625
2.750	**2.317**	**.165**	**PG0202750**
2.875	2.442	.165	PG0202875
3.000	**2.567**	**.165**	**PG0203000**
3.125	2.692	.165	PG0203125
3.250	**2.640**	**.248**	**PG0303250**
3.375	2.765	.248	PG0303375
3.500	**2.890**	**.248**	**PG0303500**
3.625	3.015	.248	PG0303625
3.750	**3.140**	**.248**	**PG0303750**
3.875	3.265	.248	PG0303875

Bore Diameter	Groove Diameter	Groove Width	TSS Part No.
D_N H9	d_1 h9	L_1 +.008	
4.000	**3.390**	**.248**	**PG0304000**
4.125	3.515	.248	PG0304125
4.250	**3.640**	**.248**	**PG0304250**
4.375	3.765	.248	PG0304375
4.500	**3.890**	**.248**	**PG0304500**
4.625	4.015	.248	PG0304625
4.750	**4.140**	**.248**	**PG0304750**
4.875	4.265	.248	PG0304875
5.000	**4.390**	**.248**	**PG0305000**
5.125	4.515	.248	PG0305125
5.250	**4.640**	**.248**	**PG0305250**
5.375	4.548	.319	PG0405375
5.500	**4.673**	**.319**	**PG0405500**
5.625	4.798	.319	PG0405625
5.750	**4.923**	**.319**	**PG0405750**
6.000	**5.173**	**.319**	**PG0406000**
6.250	5.423	.319	PG0406250
6.500	**5.673**	**.319**	**PG0406500**
6.750	5.923	.319	PG0406750
7.000	**6.173**	**.319**	**PG0407000**
7.250	6.423	.319	PG0407250
7.500	**6.673**	**.319**	**PG0407500**
7.750	6.923	.319	PG0407750
8.000	**7.173**	**.319**	**PG0408000**
8.250	7.423	.319	PG0408250
8.500	**7.673**	**.319**	**PG0408500**
8.750	7.923	.319	PG0408750
9.000	**8.173**	**.319**	**PG0409000**
9.250	8.423	.319	PG0409250
9.500	**8.673**	**.319**	**PG0409500**
9.750	8.923	.319	PG0409750
10.000	**9.173**	**.319**	**PG0410000**
10.500	9.673	.319	PG0410500
11.000	**10.173**	**.319**	**PG0411000**
11.500	10.673	.319	PG0411500
12.000	**11.173**	**.319**	**PG0412000**
12.500	11.673	.319	PG0412500
13.000	**12.035**	**.319**	**PG0513000**
13.500	12.535	.319	PG0513500
14.000	**13.035**	**.319**	**PG0514000**

Bore Diameter	Groove Diameter	Groove Width	TSS Part No.
D_N H9	d_1 h9	L_1 +.008	
14.500	13.535	.319	PG0514500
15.000	**14.035**	**.319**	**PG0515000**
15.500	14.535	.319	PG0515500
16.000	**15.035**	**.319**	**PG0516000**
16.500	15.535	.319	PG0516500
17.000	**16.035**	**.319**	**PG0517000**
17.500	16.535	.319	PG0517500
18.000	**17.035**	**.319**	**PG0518000**
18.500	17.535	.319	PG0518500
19.000	**18.035**	**.319**	**PG0519000**
19.500	18.535	.319	PG0519500
20.000	**19.035**	**.319**	**PG0520000**

The sizes listed in **bold** font are preferred sizes (more likely to be available for immediate shipment). Other dimensions and all intermediate sizes up to 106 inches (2,700mm) diameter can be supplied.

Double-Acting

O-Ring-Energized Turcon® Slipper Seal

Material:
Turcon® , Zurcon® and Elastomer

Turcon® Glyd Ring® C

Description

Successfully used for decades, the Turcon® Glyd Ring® C is a very effective and reliable low frictional seal. It is particularly suitable as a piston seal in both high and low pressure systems.

The double-acting Turcon® Glyd Ring® C is a combination of a Turcon® -based slipper seal and an energizing O-Ring. It is produced with an interference fit which, together with the squeeze of the O-Ring, ensures a good sealing effect even at low pressure. At higher system pressures, the O-Ring is energized by the fluid, pushing the Turcon® Glyd Ring® C against the sealing face with increased force.

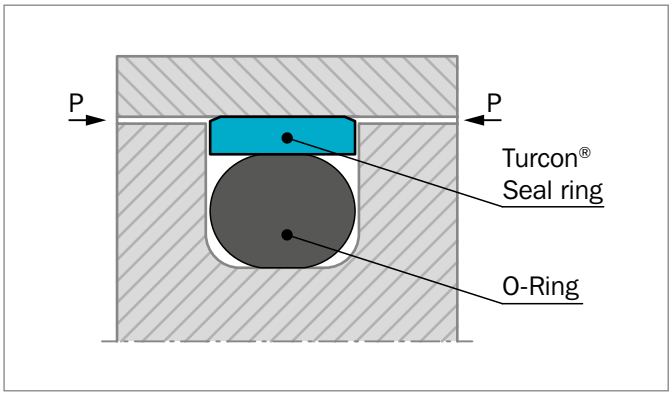

Figure 78: Turcon® Glyd Ring® C

The geometry of the Turcon® Glyd Ring® C ensures a good static sealing and allows the lubricating hydrodynamic oil film to be built under the seal in reciprocating applications.

NOTCHES

To assure that a rapid energizing of the seal takes place at sudden changes of pressure and direction, radial notches are machined on both sides of the seal.

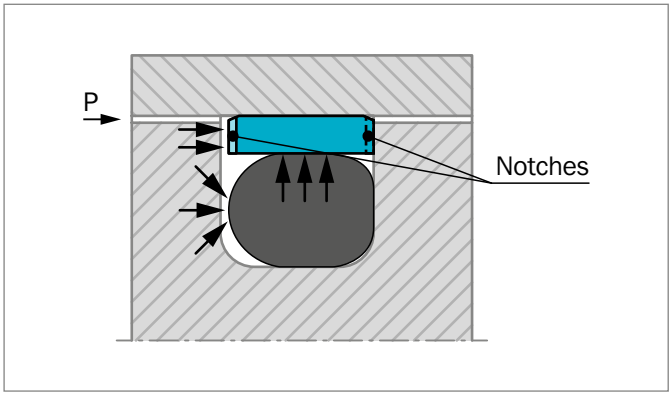

Figure 79: Turcon® Glyd Ring® C with notches on both sides

ADVANTAGES

- No stick-slip effect when starting for smooth operation
- Minimum static and dynamic friction coefficient for minimum energy loss and operating temperature
- Suitable for non-lubricating fluids depending on seal material for optimum design flexibility
- High wear resistance ensures long service life
- No adhesive effect to the mating surface during long period of inactivity or storage
- Suitable for most hydraulic fluids in relation with most modern hardware materials and surface finishes depending on material selected
- Suitable for new environmentally safe hydraulic fluids

APPLICATION EXAMPLES

Over several decades the Turcon® Glyd Ring® C has been successfully implemented as a double-acting piston seal for hydraulic components. Applications include:

- Machine tools
- Robotics
- Handling machinery
- Manipulators
- Valves for hydraulic & pneumatic circuits
- Fittings
- Testing machinery
- Hydraulic power steering
- Brake systems
- Brake boosters
- Low temperature hydraulics
- Chemical processing equipment
- Filling machines

TECHNICAL DATA

Operating conditions:
The Turcon® Glyd Ring® C is recommended for reciprocating movements (with a length of stroke at least twice the groove width).

Pressure:	Up to 7,250 psi (50 MPa)
Velocity:	Up to 50 ft/s (15 m/s)
Frequency:	Up to 5 Hz.
Temperature:	-49°F to +392°F (-45°C to +200°C)
Media:	Mineral oil-based hydraulic fluids, barely flammable hydraulic fluids, environmentally safe hydraulic fluids (biological degradable oils), water, air and others, depending on the O-Ring material compatibility.
Clearance:	The maximum permissible radial clearance S_{max}, as shown in the Table 65, as a function of the operating pressure and functional diameter.

IMPORTANT NOTE

The above data are maximum values and cannot be used at the same time. e.g. the maximum operating speed depends on material type, pressure, temperature and gap value. Temperature range also dependent on medium.

MATERIALS

Standard Application:
For hydraulic components in mineral oils containing or medium with good lubricating performance

Seal ring: Turcon® T46

Energizer: O-Ring NBR 70 shore A or FKM 70 Shore A depending on the temperature

Set code: T46N or T46V

Special Application:
Short stroke movements, non-lubricating fluids or pneumatic applications require self-lubricating sealing materials. Therefore we recommend:

Seal ring: Turcon® T40

Energizer: NBR, 70 Shore A N
FKM, 70 Shore A V
depending on temperature

Set code: T40N or T40V

If low friction coefficient is required, we recommend:

Seal ring: Turcon® T05

Energizer: NBR, 70 Shore A N
FKM, 70 Shore A V
depending on temperature
For special requirements, other elastomers are available on request.

Set code: T05N or T05V

If rougher surface finish must be sealed, we recommend:

Seal ring: Zurcon® Z53

Energizer: NBR, 70 Shore A N

Set code: Z53N

If exposure to water is required, we recommend:

Seal ring: Zurcon® Z80

Energizer: NBR, 70 Shore A N

Set code: Z80N

For pneumatics applications we recommend a specific pneumatic version, the Turcon® Glyd Ring® APG, which fits the same groove dimensions. This series has a reduced O-Ring squeeze adapted to this function.

Table 64: Turcon® and Zurcon® Materials for Glyd Ring®

Material, Applications, Properties	Code	O-Ring Material Shore A	Code	O-Ring Operating Temp.* °F	Mating Surface Material	PSI Max.
Turcon® M12 First material choice for seals in linear motion Overall improved properties For new constructions and updating For all commonly applied hydraulic fluids including fluids with low lubrication performance Lowest friction and best sliding properties Lowest wear on seals Improved absorption of abrassive contaminants Low wear or abrasion of counter surface BAM tested Mineral fiber and additives filled Color: Dark gray	M12	NBR-70	N	-22 to +212	Steel Steel hardened Steel chrome plated (rod) Steel plated (rod) Cast iron Stainless steel Titanium	7,250
		NBR-70 Low temp.	T	-49 to +176		
		FKM-70	V	+14 to +392		
Turcon® T46 Standard material for hydraulics, high compressive strength, good sliding and wear properties, good extrusion resistance BAM tested Bronze filled Color: Grayish to dark brown	T46	NBR-70	N	-22 to +212	Steel hardened Steel chrome plated Cast iron	5,800
		NBR-70 Low temp	T	-49 to +176		
		FKM-70	V	+14 to +392		
Turcon® T24 For all lubricating and non-lubricating hydraulic fluids,soft mating surfaces Carbon filled Color: Black	T24	NBR-70	N	-22 to +212	Steel Steel hardened Cast iron Stainless steel Aluminum Bronze	3,625
		NBR-70 Low temp.	T	-49 to +176		
		FKM-70	V	+14 to +392		
		EPDM-70	E**	-49 to +293		
Turcon® T05 For all lubricating hydraulic fluids, hard mating surfaces, very good sliding properties, low friction Color: Turquoise	T05	NBR-70	N	-22 to +212	Steel tubes Steel hardened	2,900
		NBR-70 Low temp.	T	-49 to +176		
		FKM-70	V	+14 to +392		
Turcon® T40 For all lubricating and non-lubricating hydraulic fluids,water hydraulic, soft mating surfaces.Surface texture not suitable for gases Carbon fiber filled Color: Gray	T40	NBR-70	N	-22 to +212	Steel Cast iron Stainless steel Aluminum Bronze Alloys	3,625
		NBR-70 Low temp.	T	-49 to +176		
		FKM-70	V	+14 to +392		
		EPDM-70	E**	-49 to +293		

Table continues on next page

Material, Applications, Properties	Code	O-Ring Material Shore A	Code	O-Ring Operating Temp.* °F	Mating Surface Material	PSI Max.
Zurcon® Z53 For lubricating hydraulic fluids, high abrasion resistance, high extrusion resistance, limited chemical resistance Color: Yellow to light-brown	Z53	NBR-70	N	-22 to +212	Steel Steel hardened Cast iron Ceramic coating Stainless steel	5,800
		NBR-70 Low temp.	T	-49 to +176		
Zurcon® Z80 For lubricating and non-lubricating hydraulic fluids, high abrasion resistance, very good chemical resistance, limited temperature resistance Ultra high molecular weight polyethylene Color: White to off-white	Z80	NBR-70	N	-22 to +176	Steel Stainless steel Aluminum Bronze Ceramic coating	5,800
		NBR-70 Low temp.	T	-49 to +176		

* The O-Ring Operation Temperature is only valid in mineral hydraulic oil.

** Material not suitable for mineral oils.

BAM: Tested by "Bundesanstalt Materialprüfung, Germany"

Highlighted materials are standard.

Installation Recommendation (Inch Piston Series)

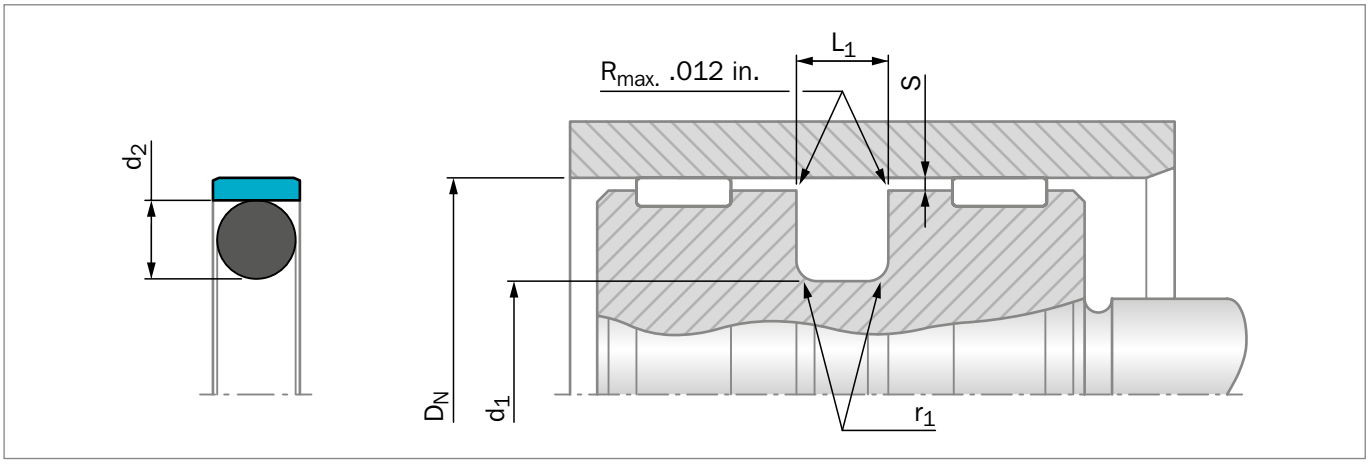

Figure 80: Installation drawing

Table 65: Installation recommendation

TSS Dash Sizes	Bore Diameter D_N H9		Groove Diameter	Groove Width	Radius	Radial Clearance S_{max}*			O-Ring Cross-Section
	Standard Application	Light Application	d_1 h9	L_1 +.008	$r_{1\,max}$	10 Mpa 1500 psi	20 Mpa 3000 psi	40 Mpa 5800 psi	d_2
006 - 010	.250 - .375	-	D_N -.143	.079	.020	.002	.002	.002	.070
011 - 039	.437 - .562	.625 - 2.875	D_N -.172	.079	.020	.003	.003	.003	.070
111 - 151	.625 - .687	.750 - 3.000	D_N -.236	.112	.020	.003	.003	.003	.103
206 - 222	.750 - 1.750	-	D_N -.300	.149	.030	.003	.003	.003	.139
223 - 260	-	1.875 - 6.750	D_N -.363	.149	.030	.003	.003	.003	.139
325 - 350	1.875 - 5.000	-	D_N -.491	.221	.050	.004	.004	.004	.210
426 - 437	5.125 - 6.500	-	D_N -.593	.297	.060	.004	.004	.004	.275
438 - 445	6.750 - 8.500	-	D_N -.718	.297	.060	.004	.004	.004	.275
446 - 474	9.000 - 25.500	-	D_N -.968	.297	.060	.004	.004	.004	.275

* At pressures >**40 MPa (5,800 psi)** use diameter tolerance H8/f8 (bore/piston) in area of the seal.

ORDERING EXAMPLE

Turcon® Glyd Ring® , complete with O-Ring, standard application, Series C

Dash No.:	215
TSS Part No.:	PG470B215-T46N

Select the material from Table 64. The corresponding code numbers are appended to the TSS Part No. Together they form the TSS Article No. All intermediate sizes not shown in Table 66 will have special TSS Part Numbers.

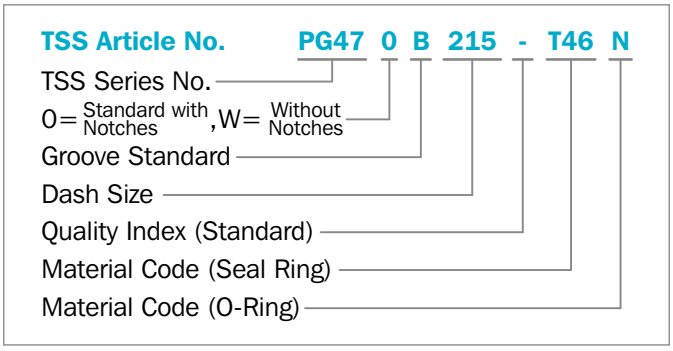

NOTE

Turned - other diameters also available, no tool costs.

Table 66: Installation dimensions / TSS Part No.

Bore Diameter	Groove Diameter	Groove Width	TSS Part No.
D_N H9	d_1 h9	L_1 +.008	
.250	.107	.079	PG470B006
.313	.170	.079	PG470B008
.375	.232	.079	PG470B010
.438	.266	.079	PG470B011
.500	**.328**	**.079**	**PG470B012**
.563	.391	.079	PG470B013
.625	.453	.079	PG470B014
.688	.515	.079	PG470B015
.750	**.577**	**.079**	**PG470B016**
.813	.640	.079	PG470B017
.875	.702	.079	PG470B018
.938	.765	.079	PG470B019
1.000	**.763**	**.112**	**PG470B117**
1.063	.826	.112	PG470B118
1.125	.888	.112	PG470B119
1.188	.951	.112	PG470B120
1.250	**1.013**	**.112**	**PG470B121**
1.313	1.076	.112	PG470B122
1.375	1.138	.112	PG470B123
1.438	1.201	.112	PG470B124
1.500	**1.263**	**.112**	**PG470B125**
1.563	1.326	.112	PG470B126
1.625	1.388	.112	PG470B127
1.688	1.451	.112	PG470B128
1.750	**1.513**	**.112**	**PG470B129**
1.813	1.576	.112	PG470B130
1.875	1.638	.112	PG470B131
1.938	1.701	.112	PG470B132
2.000	**1.763**	**.112**	**PG470B133**
2.063	1.826	.112	PG470B134
2.125	1.888	.112	PG470B135
2.188	1.951	.112	PG470B136
2.250	**2.013**	**.112**	**PG470B137**
2.313	2.076	.112	PG470B138
2.375	2.138	.112	PG470B139
2.438	2.201	.112	PG470B140
2.500	**2.263**	**.112**	**PG470B141**
2.625	2.262	.149	PG470B229
2.750	2.387	.149	PG470B230
2.875	2.512	.149	PG470B231
3.000	**2.637**	**.149**	**PG470B232**
3.125	2.762	.149	PG470B233
3.250	2.887	.149	PG470B234
3.375	3.012	.149	PG470B235
3.500	**3.137**	**.149**	**PG470B236**
3.625	3.262	.149	PG470B237
3.750	3.387	.149	PG470B238
3.875	3.512	.149	PG470B239
4.000	**3.509**	**.221**	**PG470B342**
4.125	3.634	.221	PG470B343
4.250	3.759	.221	PG470B344
4.375	3.884	.221	PG470B345
4.500	**4.009**	**.221**	**PG470B346**
4.625	4.134	.221	PG470B347
4.750	4.259	.221	PG470B348
4.875	4.384	.221	PG470B349
5.000	**4.509**	**.221**	**PG470B350**
5.125	4.532	.297	PG470B426
5.250	4.657	.297	PG470B427
5.375	4.782	.297	PG470B428
5.500	**4.907**	**.297**	**PG470B429**
5.625	5.032	.297	PG470B430
5.750	5.157	.297	PG470B431
5.875	5.282	.297	PG470B432
6.000	**5.407**	**.297**	**PG470B433**
6.125	5.532	.297	PG470B434
6.250	5.657	.297	PG470B435
6.375	5.782	.297	PG470B436
6.500	5.907	.297	PG470B437
6.750	6.032	.297	PG470B438
7.000	**6.282**	**.297**	**PG470B439**
7.250	6.532	.297	PG470B440
7.500	6.782	.297	PG470B441
7.750	7.032	.297	PG470B442
8.000	**7.282**	**.297**	**PG470B443**
8.250	7.532	.297	PG470B444
8.500	7.782	.297	PG470B445
9.000	8.032	.297	PG470B446
9.500	8.532	.297	PG470B447
10.000	9.032	.297	PG470B448
10.500	9.532	.297	PG470B449

The sizes listed in **bold** font are preferred sizes (more likely to be available for immediate shipment). Other dimensions and all intermediate sizes up to 106 inches (2,700mm) diameter can be supplied.

Double-Acting

Elastomer-Energized Zurcon® Slipper Seal

Step Cut Sealing Element

Material:
Zurcon® and Elastomer

Zurcon® Glyd Ring® P

Description

The double-acting Zurcon® Glyd Ring® P is a combination of a Zurcon® -based slipper seal with a step cut and an energizing rectangular elastomeric ring. It is produced with an interference fit at closed step cut which together with the squeeze of the rectangular energizer ring ensures a good sealing effect even at low pressure.

At higher system pressures, the rectangular ring is energized by the fluid, pushing the Zurcon® Glyd Ring® P against the sealing face with increased force. At high peak pressures, the Zurcon® step cut seal ring can follow ballooning of the tube without losing the sealability.

Due to the Zurcon® high strength plastic material, two times bigger extrusion gaps are possible compared with Turcon® materials. The step cut in the ring is necessary for installation in closed grooves and for the flexibility of the seal ring due to the high stiffness of the material.

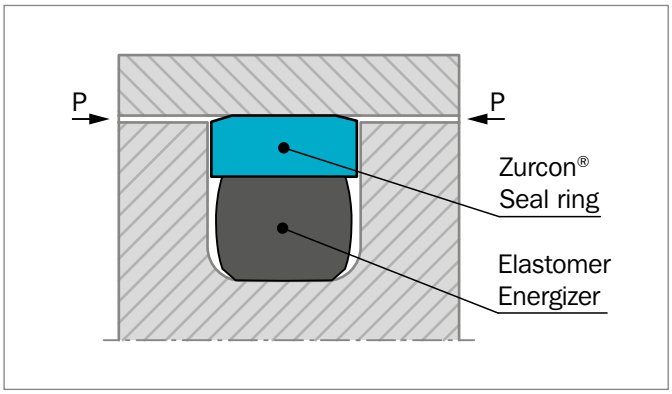

Figure 81: Zurcon® Glyd Ring® P

STEP CUT

For easy installation on the piston and for the flexibility of the seal ring a precision step cut is produced by special tool technology.

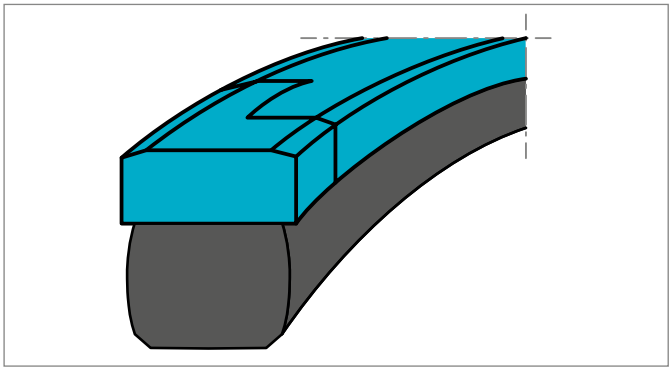

Figure 82: Step cut on Zurcon® Glyd Ring® P

ADVANTAGES

- Easy installation on piston without special tools
- Due to large extrusion gap, safe use even with soiled media
- Simple groove design, one piece piston possible
- Increased clearance compared to Turcon® Glyd Ring® seals (approx. +50%), depending on operation conditions
- Resistant against shock loads
- High wear resistant material ensures long service life

APPLICATION EXAMPLES

- Telescopic cylinders
- Construction machinery, e.g. excavators
- Truck cranes
- Fork lifts

It is particularly recommended for heavy duty applications

TECHNICAL DATA

Operating conditions:
The Zurcon® Glyd Ring® P is recommended for reciprocating (with a length of stroke at least twice the groove width) movements where the dimensional gap between piston and tube is as big as possible or where high pressure peaks occur during operation.

Pressure:	7,250 psi (50 MPa) standard
Velocity:	Up to 3.3 ft/s (1 m/s)
Temperature:	-40 °F to +230 °F (-40 °C to +110 °C)
Media:	Mineral oil-based hydraulic fluids

IMPORTANT NOTE

The above data are maximum values and cannot be used at the same time. e.g. the maximum operating speed depends on material type, pressure, temperature and gap value. Temperature range also dependent on medium.

MATERIALS

Standard Application:
For hydraulic components in mineral oils or media with good lubricating performance

Seal ring:	Zurcon® Z66	
Energiser:	NBR, 70 Shore A	N
Set reference:	Z66N	

Low temperature application:

Seal ring:	Zurcon® Z66	
Energiser:	NBR, 70 Shore A (low temp)	T
Set reference:	Z66T	

High temperature application:

Seal ring:	Zurcon® Z66	
Energiser:	FKM, 70 Shore A	V
Set reference:	Z66V	

Installation Recommendation (Inch Piston Series)

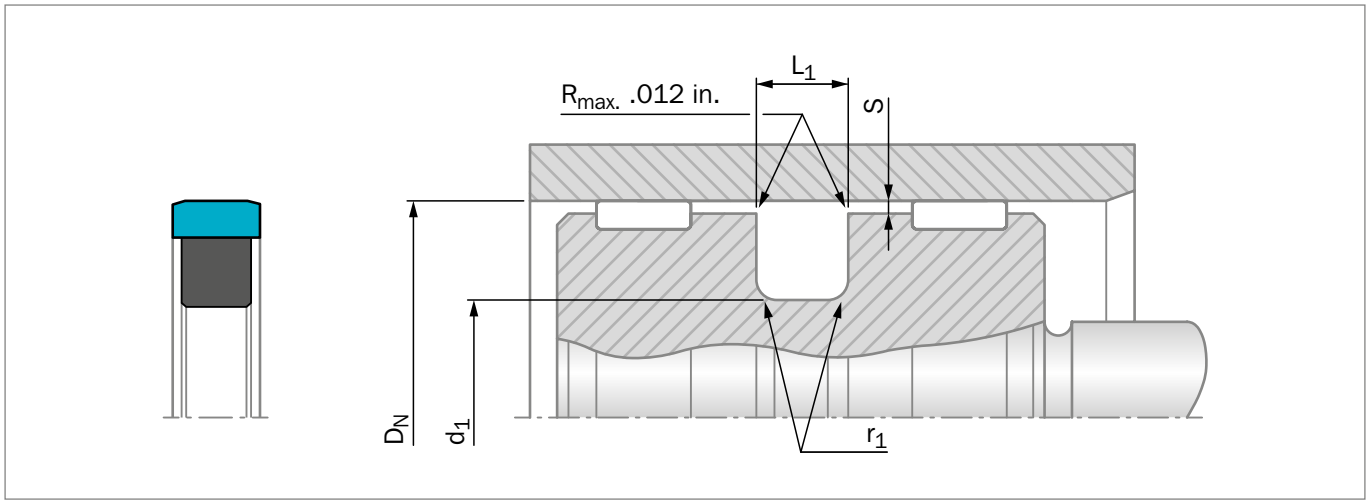

Figure 83: Installation drawing

Table 67: Installation recommendation

TSS Series No.	Bore Diameter D_N H9	Groove Diameter	Groove Width	Radius	Radial Clearance S_{max}*
	Standard Application	d_1 h9	L_1 +.008	$r_{1\ max}$	40 MPa 5800 psi
PGPA	2.000 - 3.249	D_N -.538	.282	.025	.032
PGPB	3.250 - 5.499	D_N -.558	.282	.035	.040
PGPC	2.500 - 3.249	D_N -.538	.312	.025	.032
PGPD	3.250 - 4.500	D_N -.558	.312	.035	.040
PGPE	5.500 - 8.999	D_N -.760	.377	.035	.050

* At pressures **>40 MPa (5.800 psi)** use diameter tolerance H8/f8 (bore/piston) in area of the seal.

ORDERING EXAMPLE

Zurcon® Glyd Ring® P

TSS Series No.:	PGPC
TSS Part No.:	PGPC03000
TSS seal ring material code:	Z66
Energizer material code:	N
Set code:	Z66N

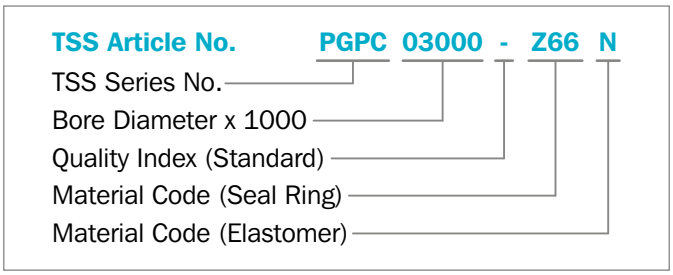

Table 68: Installation dimensions / TSS Part No.

Bore Diameter	Groove Diameter	Groove Width	TSS Part No.
D_N H9	d_1 h9	L_1 +.008	
2.000	**1.462**	**.282**	**PGPA02000**
2.250	1.712	.282	PGPA02250
2.500	**1.962**	**.282**	**PGPA02500**
2.500	**1.962**	**.312**	**PGPC02500**
2.750	2.212	.282	PGPA02750
2.750	**2.212**	**.312**	**PGPC02750**
3.000	**2.462**	**.282**	**PGPA03000**
3.000	**2.462**	**.312**	**PGPC03000**
3.250	2.692	.282	PGPB03250
3.250	**2.692**	**.312**	**PGPD03250**
3.500	**2.942**	**.282**	**PGPB03500**
3.500	**2.942**	**.312**	**PGPD03500**
3.750	3.192	.282	PGPB03750
3.750	3.192	.312	PGPD03750
4.000	**3.442**	**.282**	**PGPB04000**
4.000	3.442	.312	PGPD04000
4.250	3.692	.282	PGPB04250
4.250	3.692	.312	PGPD04250
4.500	**3.942**	**.282**	**PGPB04500**
4.500	3.942	.312	PGPD04500
4.750	4.192	.282	PGPB04750
5.000	**4.442**	**.282**	**PGPB05000**
5.250	4.692	.282	PGPB05250
5.500	**4.740**	**.377**	**PGPE05500**
5.750	4.990	.377	PGPE05750
6.000	**5.240**	**.377**	**PGPE06000**
6.500	5.740	.377	PGPE06500
7.000	**6.240**	**.377**	**PGPE07000**
7.500	6.740	.377	PGPE07500
8.000	**7.240**	**.377**	**PGPE08000**

The sizes listed in **bold** font are preferred sizes (more likely to be available for immediate shipment). Other dimensions and all intermediate sizes up to 10 inches (254mm) diameter can be supplied.

Single-Acting

O-Ring-Energized Turcon® Slipper Seal

Material:
Turcon® , Zurcon® and Elastomer

Turcon® Stepseal® 2K*

Description

Stepseal® 2K is a single-acting seal element consisting of a seal ring of high-grade Turcon® or Zurcon® materials and an O-Ring as energizing element.

Stepseal® 2K was originally developed and patented by Trelleborg Sealing Solutions as a rod seal. Due to its outstanding properties it is well suited as a single-acting piston seal where high demands are made on positional accuracy and free movement.

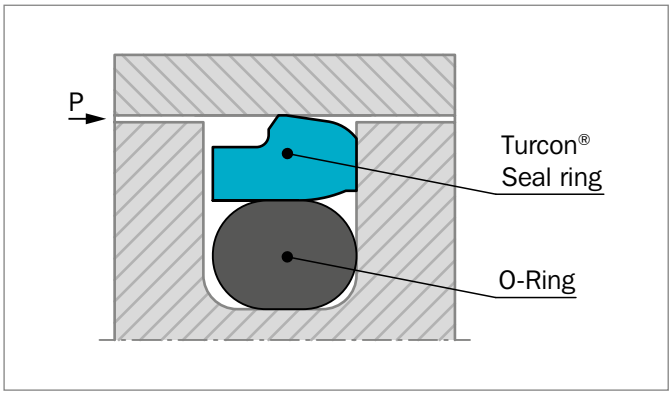

Figure 84: Turcon® Stepseal® 2K

ADVANTAGES

- High static and dynamic sealing effect
- Stick-slip-free operation for precise control
- High abrasion resistance and high resistance to extrusion
- Long service life
- Simple groove design, one-piece piston possible
- Wide range of application temperatures and high resistance to chemicals, depending on the choice of O-Ring material
- Simple installation without seal edge deformation
- Available for all diameters up to 106 inches (2,700mm)
- Low friction

APPLICATION EXAMPLES

The Turcon® Stepseal® 2K is the recommended sealing element for single-acting pistons in hydraulic components for:

- Injection molding machines
- Machine tools
- Presses

It is particularly recommended in floating piston accumulators as the primary seal on the oil side in combination with AQ-Seal® and AQ-Seal® 5.

TECHNICAL DATA

Operating conditions

Pressure:	Up to 8,700 psi (60 MPa)
Velocity:	Up to 50 ft/s (15 m/s), frequency up to 5 Hz.
Temperature:	-49 °F to +392 °F (-45 °C to +200 °C)**
Media:	Mineral oil-based hydraulic fluids, flame retardant hydraulic fluids, environmentally safe hydraulic fluids (bio-oils), water, air and others, depending on the O-Ring material (see Table 69)
Clearance:	The maximum permissible radial clearance S_{max} is shown in Table 71, as a function of the operating pressure and functional diameter.

IMPORTANT NOTE

The above data are maximum values and cannot be used at the same time. e.g. the maximum operating speed depends on material type, pressure, temperature and gap value. Temperature range also dependent on medium.

** In the case of unpressurized applications in temperatures below 32 °F (0 °C) please contact our application engineers for assistance!

* Patented and patent pending geometry

MATERIALS

Standard Application:
For hydraulic components in mineral oils containing zinc or medium with good lubricating performance

Seal ring: Turcon® T46

Energizer: NBR, 70 Shore A N
FKM, 70 Shore A V
depending on temperature

Set reference: T46N or T46V

Special Application:
Non-lubricating fluids or pneumatic applications require self-lubricating sealing materials. Therefore we recommend:

Seal ring: Turcon® T29

Energizer: NBR, 70 Shore A N
FKM, 70 Shore A V
depending on temperature

Set reference: T29N or T29V

Rough mating surface finish and improved leakage control

Seal ring: Zurcon® Z53

Energizer: NBR, 70 Shore A N

Set reference: Z53N

Table 69: Turcon® and Zurcon® materials for Stepseal® 2K

Material, Applications, Properties	Code	O-Ring Material Shore A	Code	O-Ring Operating Temp.* °F	Mating Surface Material	PSI Max.
Turcon® M12 First material choice for seals in linear motion Overall improved properties For new constructions and updating For all commonly applied hydraulic fluids including fluids with low lubrication performance Lowest friction and best sliding properties Lowest wear on seals Improved absorption of abrassive contaminants Low wear or abrasion of counter surface BAM tested Mineral fiber and additives filled Color: Dark gray	M12	NBR-70	N	-22 to +212	Steel Steel hardened Steel chrome plated (rod) Steel plated (rod) Cast iron Stainless steel Titanium	7,250
		NBR-70 Low temp.	T	-49 to +176		
		FKM-70	V	+14 to +392		
Turcon® T46 Standard material for hydraulics, high compressive strength, good sliding and wear properties, good extrusion resistance BAM tested Bronze filled Color: Grayish to dark brown	T46	NBR-70	N	-22 to +212	Steel hardened Steel chrome plated Cast iron	7,250
		NBR-70 Low temp.	T	-49 to +176		
		FKM-70	V	+14 to +392		
Turcon® T08 Very high compressive strength, very good extrusion resistance High bronze filled Color: Light to dark brown	T08	NBR-70	N	-22 to +212	Steel hardened Steel chrome plated Cast iron	8,700
		NBR-70 Low temp.	T	-49 to +176		
		FKM-70	V	+14 to +392		
Turcon® T40 For all lubricating and non-lubricating hydraulic fluids, hydraulic oils without zinc, water hydraulic, soft mating surfaces Surface texture not suitable for gases Carbon fiber filled Color: Gray	T40	NBR-70	N	-22 to +212	Steel Steel chrome plated Cast iron Stainless steel Aluminum Bronze Alloys	3,625
		NBR-70 Low temp.	T	-49 to +176		
		FKM-70	V	+14 to +392		
		EPDM-70	E**	-49 to +293		
Turcon® T29 For all lubricating and non-lubricating hydraulic fluids, hydraulic oils without zinc, soft mating surfaces, good extrusion resistance Surface texture not suitable for gases High carbon fiber filled Color: Gray	T29	NBR-70	N	-22 to +212	Steel Steel chrome plated Cast iron Stainless steel Aluminium Bronze	4,350
		NBR-70 Low temp.	T	-49 to +176		
		FKM-70	V	+14 to +392		
		EPDM-70	E**	-49 to +293		

Table continues on next page

Material, Applications, Properties	Code	O-Ring Material Shore A	Code	O-Ring Operating Temp.* °F	Mating Surface Material	PSI Max.
Turcon® T05 For all lubricating hydraulic fluids, hard mating surfaces, very good slide properties, low friction. Color: Turquoise	T05	NBR-70	N	-22 to +212	Steel hardened Steel chrome plated	2,900
		NBR-70 Low temp.	T	-49 to +176		
		FKM-70	V	+14 to +392		
Turcon® T42 For all lubricating and non-lubricating hydraulic fluids, good chemical resistance, good dielectric properties Glass fiber filled + MoS_2 Color: Gray to blue	T42	NBR-70	N	-22 to +212	Steel hardened Steel chrome plated Cast iron	5,800
		NBR-70 Low temp.	T	-49 to +176		
		FKM-70	V	+14 to +392		
Turcon® T19 For all lubricating fluids and hydraulic oils without zinc, high sealing efficiency, good sliding and wear properties, mild to counter surface Mineral fiber filled Color: Dark green-gray	T19	NBR-70	N	-22 to +212	Steel Steel hardened Steel chrome plated Cast iron Stainless steel	5,000
		NBR-70 Low temp.	T	-49 to +176		
		FKM-70	V	+14 to +392		
Zurcon® Z53*** For lubricating hydraulic fluids, high abrasion resistance, high extrusion resistance, limited chemical resistance Color: Yellow to light-brown	Z53	NBR-70	N	-22 to +212	Steel Steel chrome plated Cast iron Ceramic coating Stainless steel	8,700
		NBR-70 Low temp.	T	-49 to +176		
Zurcon® Z80 For lubricating and non-lubricating hydraulic fluids, high abrasion resistance, very good chemical resistance, limited temp. resistance Ultra high molecular weight polyethylene Color: White to off-white	Z80	NBR-70	N	-22 to +176	Steel Steel chrome plated Stainless steel Aluminum Bronze Ceramic coating	5,075
		NBR-70 Low temp.	T	-49 to +176		

* The O-Ring Operation temperature is only valid in mineral hydraulic oil.

** Material not suitable for mineral oils.

*** max. Ø 90 inches (2,300mm).

BAM: Tested by "Bundes Anstalt Materialprüfung, Germany".

Highlighted materials are standard.

Installation Recommendation (Inch Piston Series)

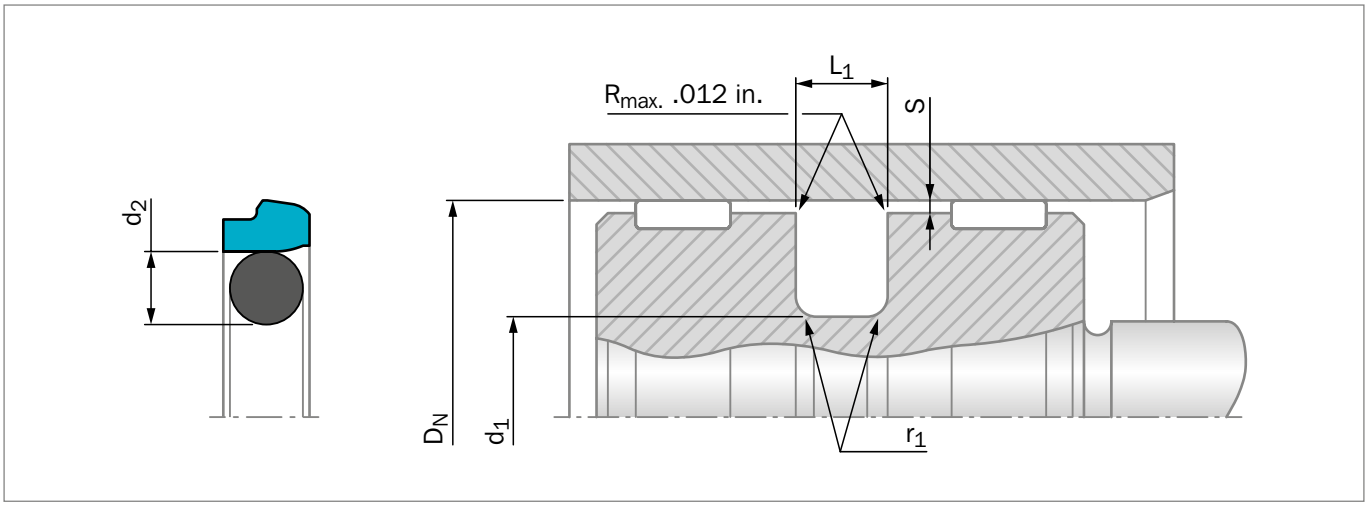

Figure 85: Installation drawing

Table 70: Installation recommendation

TSS Series No.	Bore Diameter D_N H9			Groove Diameter	Groove Width	Radius	Radial Clearance S_{max}*			O-Ring Cross-Section
	Standard Application	Light Application	Heavy-Duty Application	d_1 h9	L_1 +.008	$r_{1\,max}$	10 MPa 1500 psi	20 MPa 3000 psi	40 MPa 5800 psi	d_2
PSF0	.313 - .749	.750 - 1.000	-	D_N -.193	.087	.020	.012	.009	.007	.070
PSF1	.750 - 1.499	1.500 - 2.500	-	D_N -.287	.126	.020	.016	.012	.008	.103
PSF2	1.500 - 2.499	2.500 - 8.000	.625 - 1.499	D_N -.421	.165	.025	.016	.012	.009	.139
PSF3	2.500 - 7.999	8.000 - 10.000	1.00 - 2.499	D_N -.594	.248	.030	.020	.014	.010	.210
PSF4	8.000 - 9.999	10.000 - 26.000	3.125 - 7.999	D_N -.807	.319	.035	.024	.017	.012	.275
PSF5	10.000 - 26.000	-	5.250 - 9.999	D_N -.945	.319	.035	.024	.017	.012	.275

* At pressures **>40 MPa (5.800 psi)** use diameter tolerance H8/f8 (bore/piston) in area of the seal.

ORDERING EXAMPLE

Turcon® Stepseal® 2K, complete with O-Ring, standard application, Series PSF3 (from Table 70).

Piston diameter:	D_N = 6.000 inches
TSS Part No.:	PSF306000 (from Table 71)

Select the material from Table 69. The corresponding code numbers are appended to the TSS Part No. (from Table 71). Together they form the TSS Article No.
For all intermediate sizes not shown in Table 71, the TSS Article No. can be determined from the example opposite.

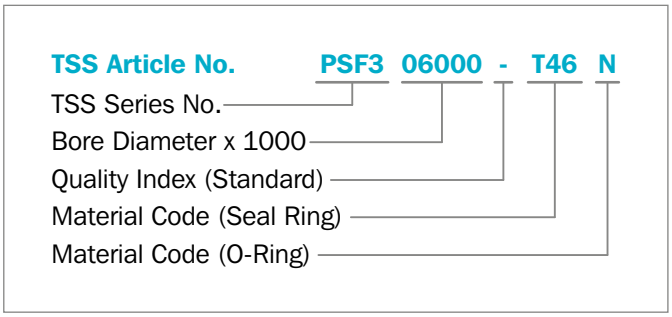

Table 71: Installation dimensions / TSS Part No.

Bore Diameter	Groove Diameter	Groove Width	TSS Part No.
D_N H9	d_1 h9	L_1 +.008	
.500	.307	.087	PSF000500
.563	.370	.087	PSF000563
.625	.432	.087	PSF000625
.688	.495	.087	PSF000688
.750	.557	.087	PSF000750
.750	**.329**	**.165**	**PSF200750**
.813	.526	.126	PSF100813
.813	.392	.165	PSF200813
.875	.588	.126	PSF100875
.875	**.454**	**.165**	**PSF200875**
.938	.651	.126	PSF100938
.938	.517	.165	PSF200938
1.000	.713	.126	PSF101000
1.000	**.579**	**.165**	**PSF201000**
1.063	.776	.126	PSF101063
1.063	.642	.165	PSF201063
1.125	.838	.126	PSF101125
1.125	**.704**	**.165**	**PSF201125**
1.188	.901	.126	PSF101188
1.188	.767	.165	PSF201188
1.250	**.963**	**.126**	**PSF101250**
1.250	.829	.165	PSF201250
1.313	1.026	.126	PSF101313
1.313	.892	.165	PSF201313
1.375	1.088	.126	PSF101375
1.375	**.954**	**.165**	**PSF201375**
1.438	1.151	.126	PSF101438
1.438	1.017	.165	PSF201438
1.500	1.213	.126	PSF101500
1.500	**1.079**	**.165**	**PSF201500**
1.500	0,906	.248	PSF301500
1.563	1.142	.165	PSF201563
1.563	.969	.248	PSF301563
1.625	1.204	.165	PSF201625
1.625	**1.031**	**.248**	**PSF301625**
1.688	1.267	.165	PSF201688
1.688	1.094	.248	PSF301688
1.750	1.329	.165	PSF201750
1.750	**1.156**	**.248**	**PSF301750**
1.813	1.392	.165	PSF201813

Bore Diameter	Groove Diameter	Groove Width	TSS Part No.
D_N H9	d_1 h9	L_1 +.008	
1.813	1.219	.248	PSF301813
1.875	1.454	.165	PSF201875
1.875	**1.281**	**.248**	**PSF301875**
1.938	1.517	.165	PSF201938
1.938	1.344	.248	PSF301938
2.000	1.579	.165	PSF202000
2.000	**1.406**	**.248**	**PSF302000**
2.125	1.704	.165	PSF202125
2.125	1.531	.248	PSF302125
2.250	1.829	.165	PSF202250
2.250	**1.656**	**.248**	**PSF302250**
2.375	1.954	.165	PSF202375
2.375	1.781	.248	PSF302375
2.500	2.079	.165	PSF202500
2.500	**1.906**	**.248**	**PSF302500**
2.625	2.204	.165	PSF202625
2.625	2.031	.248	PSF302625
2.750	2.329	.165	PSF202750
2.750	**2.156**	**.248**	**PSF302750**
2.875	2.454	.165	PSF202875
2.875	2.281	.248	PSF302875
3.000	2.579	.165	PSF203000
3.000	**2.406**	**.248**	**PSF303000**
3.125	2.704	.165	PSF203125
3.125	2.531	.248	PSF303125
3.250	2.829	.165	PSF203250
3.250	**2.656**	**.248**	**PSF303250**
3.375	2.954	.165	PSF203375
3.375	2.781	.248	PSF303375
3.500	3.079	.165	PSF203500
3.500	**2.906**	**.248**	**PSF303500**
3.625	3.204	.165	PSF203625
3.625	3.031	.248	PSF303625
3.750	3.329	.165	PSF203750
3.750	**3.156**	**.248**	**PSF303750**
3.875	3.454	.165	PSF203875
3.875	3.281	.248	PSF303875
4.000	3.579	.165	PSF204000
4.000	**3.406**	**.248**	**PSF304000**
4.125	3.704	.165	PSF204125

Bore Diameter	Groove Diameter	Groove Width	TSS Part No.
D_N H9	d_1 h9	L_1 +.008	
4.125	3.531	.248	PSF304125
4.250	3.829	.165	PSF204250
4.250	3.656	.248	PSF304250
4.375	3.954	.165	PSF204375
4.375	3.781	.248	PSF304375
4.500	4.079	.165	PSF204500
4.500	**3.906**	**.248**	**PSF304500**
4.625	4.031	.248	PSF304625
4.625	3.818	.319	PSF404625
4.750	4.156	.248	PSF304750
4.750	3.943	.319	PSF404750
4.875	4.281	.248	PSF304875
4.875	4.068	.319	PSF404875
5.000	**4.406**	**.248**	**PSF305000**
5.000	4.193	.319	PSF405000
5.125	4.531	.248	PSF305125
5.125	4.318	.319	PSF405125
5.250	4.656	.248	PSF305250
5.250	4.443	.319	PSF405250
5.375	4.781	.248	PSF305375
5.375	4.568	.319	PSF405375
5.500	**4.906**	**.248**	**PSF305500**
5.500	4.693	.319	PSF405500
5.625	5.031	.248	PSF305625
5.625	4.818	.319	PSF405625
5.750	5.156	.248	PSF305750
5.750	4.943	.319	PSF405750
6.000	**5.406**	**.248**	**PSF306000**
6.000	5.193	.319	PSF406000
6.250	5.656	.248	PSF306250
6.250	5.443	.319	PSF406250
6.500	**5.906**	**.248**	**PSF306500**
6.500	5.693	.319	PSF406500
6.750	6.156	.248	PSF306750
6.750	5.943	.319	PSF406750
7.000	**6.406**	**.248**	**PSF307000**
7.000	6.193	.319	PSF407000
7.250	6.656	.248	PSF307250
7.250	6.443	.319	PSF407250
7.500	**6.906**	**.248**	**PSF307500**

Bore Diameter	Groove Diameter	Groove Width	TSS Part No.
D_N H9	d_1 h9	L_1 +.008	
7.500	6.693	.319	PSF407500
7.750	7.156	.248	PSF307750
7.750	6.943	.319	PSF407750
8.000	**7.193**	**.319**	**PSF408000**
8.250	7.443	.319	PSF408250
8.500	7.693	.319	PSF408500
8.750	7.943	.319	PSF408750
9.000	**8.193**	**.319**	**PSF409000**
9.250	8.443	.319	PSF409250
9.500	8.693	.319	PSF409500
9.750	8.943	.319	PSF409750
10.000	9.193	.319	PSF410000
10.000	**9.055**	**.319**	**PSF510000**
10.500	9.693	.319	PSF410500
10.500	9.555	.319	PSF510500
11.000	10.193	.319	PSF411000
11.000	**10.055**	**.319**	**PSF511000**
11.500	10.693	.319	PSF411500
11.500	10.555	.319	PSF511500
12.000	**11.055**	**.319**	**PSF512000**
12.500	11.555	.319	PSF512500
13.000	12.055	.319	PSF513000
13.500	12.555	.319	PSF513500
14.000	**13.055**	**.319**	**PSF514000**
14.500	13.555	.319	PSF514500
15.000	14.055	.319	PSF515000
15.500	14.555	.319	PSF515500
16.000	**15.055**	**.319**	**PSF516000**
16.500	15.555	.319	PSF516500
17.000	16.055	.319	PSF517000
17.500	16.555	.319	PSF517500
18.000	**17.055**	**.319**	**PSF518000**
18.500	17.555	.319	PSF518500
19.000	18.055	.319	PSF519000
19.500	18.555	.319	PSF519500
20.000	**19.055**	**.319**	**PSF520000**

The sizes listed in **bold** font are preferred sizes (more likely to be available for immediate shipment). Other dimensions and all intermediate sizes up to 106 inches (2,700mm) diameter can be supplied.

Double-Acting

O-Ring-Energized Turcon® Slipper Seal

For O-Ring Grooves

Material:
Turcon® and Elastomer

Turcon® Double Delta®

Description

The Turcon® Double Delta® is a rubber-energized plastic faced seal. The seal is designed to expand and improve the service parameters of O-Rings and is installed in existing O-Ring grooves.

The Double Delta® combines the flexibility and response of O-Rings with the wear and friction characteristics of the Turcon® materials in dynamic applications.

The figure below shows the cross section of the Double Delta® .

The double-acting performance of the seal comes from the symmetrical cross section which allows the seal to respond to pressure in both directions.

Initial contact pressure is provided by radial compression of the O-Ring. When the system pressure is increased the O-Ring transforms this into additional contact pressure, the contact pressure of the seal is thereby automatically adjusted so sealing is ensured under all service conditions.

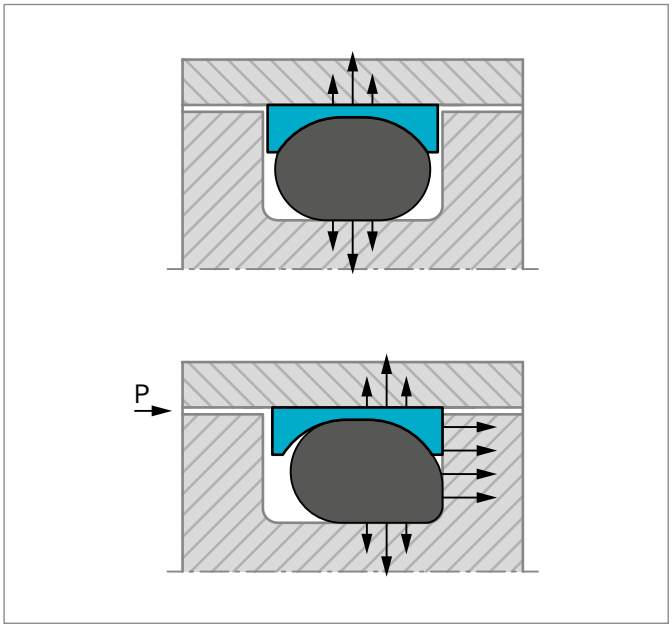

Figure 86: Turcon® Double Delta® without and with pressure

ADVANTAGES

- Compact groove dimensions and simple installation
- Low friction without stick-slip
- Resistance against wear and extrusion
- Piston seals available for all diameters from .25 to 40 inches (5 to 999.9mm)
- Standard cross sections cover AS 568A and important metric O-Rings, other cross sections available on request

APPLICATION EXAMPLES

The Turcon® Double Delta® is the recommended sealing element for double-acting pistons of hydraulic or pneumatic cylinders in sectors such as:

- Machine tools
- Handling devices
- Manipulators
- Valves
- Chemical process equipment

It is particularly recommended for light duty and small diameter applications.

TECHNICAL DATA

Operating conditions

Pressure:	Up to 5,000 psi (35 MPa)
Velocity:	Up to 50 ft/s (15 m/s)
Temperature:	-49 °F to +392 °F (-45 °C to +200 °C) (according to O-Ring material)
Media:	Mineral oil, non-flammable fluids, environmentally safe fluids and others according to O-Ring material.

IMPORTANT NOTE

The above data are maximum values and cannot be used at the same time. e.g. the maximum -operating speed depends on material type, - pressure, temperature and gap value. Temperature range also dependent on medium.

MATERIALS

Standard Application:
For hydraulic components with reciprocating movement in mineral oils containing zinc or medium with good lubricating performance and hard mating surface

Seal ring: Turcon® T46

Energizer: NBR, 70 Shore A N
FKM, 70 Shore A V
depending on temperature

Set code: T46N or T46V

Special Application:
Short stroke movements, poor lubricating fluids and soft mating surfaces

Seal ring: Turcon® T24

Energizer: NBR, 70 Shore A N
FKM, 70 Shore A V
depending on temperature

Set code: T24N or T24V

For low friction requirement in dynamic hydraulic components with good lubricating medium:

Seal ring: Turcon® T05

Energizer: NBR, 70 Shore A N
FKM, 70 Shore A V
depending on temperature

Set code: T05N or T05V

For specific applications other material combinations as listed may also be used. Please contact your local Trelleborg Sealing Solutions sales office.

Table 72: Turcon® Materials for Double Delta®

Material, Applications, Properties	Code	O-Ring Material Shore A	Code	ORing Operating Temp.* °F	Mating Surface Material	PSI Max.
Turcon® M12 First material choice for seals in linear motion Overall improved properties For new constructions and updating For all commonly applied hydraulic fluids including fluids with low lubrication performance Lowest friction and best sliding properties Lowest wear on seals Improved absorption of abrassive contaminants Low wear or abrasion of counter surface BAM tested Mineral fiber and additives filled Color: Dark gray	M12	NBR-70	N	-22 to +212	Steel Steel hardened Steel chrome plated (rod) Steel plated (rod) Cast iron Stainless steel Titanium	7,250
		NBR-70 Low temp.	T	-49 to +176		
		FKM-70	V	+14 to +392		
Turcon® T46 Standard material for hydraulics, high compressive strength, good sliding and wear properties, good extrusion resistance BAM tested Bronze-filled Color: grayish to dark brown	T46	NBR-70	N	-22 to +212	Steel tubes Steel hardened Cast iron	5,000
		NBR-70 Low temp.	T	-49 to +176		
		FKM-70	V	+14 to +392		
Turcon® T24 For all lubricating and non-lubricating hydraulic fluids,soft mating surfaces. Carbon-filled Color: black	T24	NBR-70	N	-22 to +212	Steel Steel hardened Cast iron Stainless steel Aluminium Bronze	3,625
		NBR-70 Low temp.	T	-49 to +176		
		FKM-70	V	+14 to +392		
		EPDM-70	E**	-49 to +293		
Turcon® T05 For all lubricating hydraulic fluids, hard mating surfaces, very good sliding properties, low friction Color: turquoise	T05	NBR-70	N	-22 to +212	Steel tubes Steel hardened	2,900
		NBR-70 Low temp.	T	-49 to +176		
		FKM-70	V	+14 to +392		

* The O -Ring operation temperature is only valid in mineral hydraulic oil.

** Material not suitable for mineral oils.

BAM: Tested by "Bundes Anstalt Materialprüfung, Germany".

Highlighted materials are standard.

Installation Recommendation (Inch Piston Series)

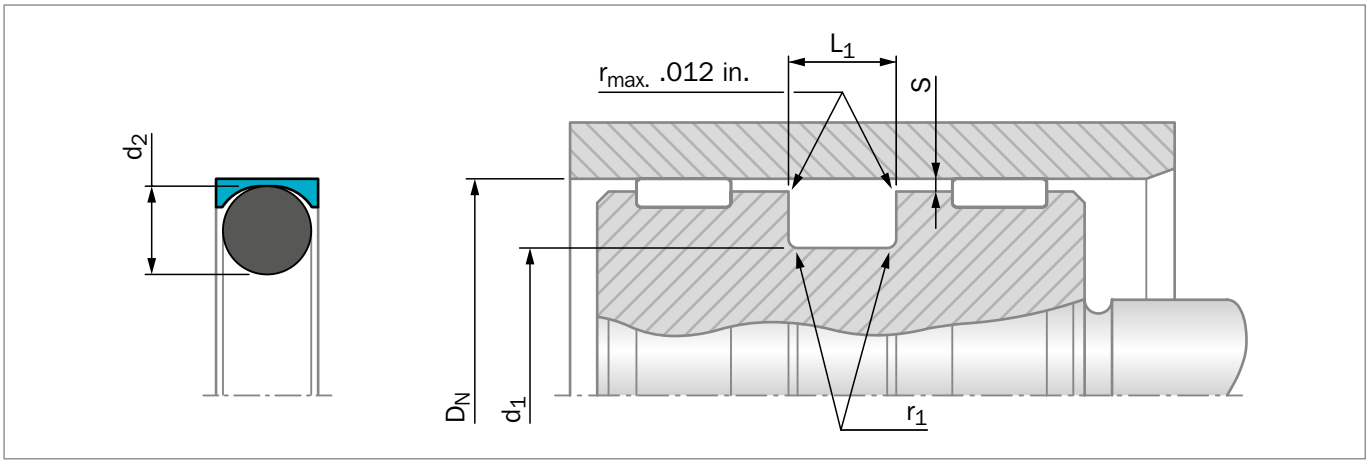

Figure 87: Installation drawing

Table 73: Installation recommendation

TSS Dash Sizes	Bore Diameter D_N H9		Groove Diameter	Groove Width	Groove Width	Radius	Radial Clearance S_{max}			O-Ring Cross-Section
	Standard Application	Light Application	d_1 h9	L_1 +.008	L_2 +.008	r_1 max	10 MPa 1500 psi	20 MPa 3000 psi	40 MPa 5800 psi	d_2
006 - 028	.250 - .281	.312 - 1.500	D_N -.110	.093	.138	.005	.004	.003	.002	.070
104 - 149	.312 - .406	.437 - 3.000	D_N -.176	.140	.171	.005	.006	.004	.003	.103
201 -248	.437 - .750	.812 - 5.000	D_N -.242	.187	.208	.010	.008	.006	.003	.139
309 - 350	.812 - 4.875	5.000	D_N -.370	.281	.311	.020	.010	.008	.004	.210
425 - 460	5.000 - 16.000	-	D_N -.474	.375	.408	.020	.012	.010	.006	.275

L_1 is for "0" Back-up groove width - PD00_B series
L_2 is for "1" Back-up groove width - PD01_B series

ORDERING EXAMPLE

Turcon® Double Delta® , complete with O -Ring, standard range, series PD00 (from Table 73)

Dash size:	117
TSS Part No.:	PD000B117 (from Table 74)

Select the material from Table 72. The corresponding code numbers are appended to the TSS Part No. (from Table 74). Together they form the TSS Article No.
For all intermediate sizes not shown in Table 74, the TSS Article No. can be determined from the example opposite.

TSS Article No. PD00 0 B 117 - T46 N

- TSS Series No. — PD00 - 0 Back-up width groove L_1; PD01 - 1 Back-up width groove L_2
- 0=std, N=with notches
- Groove Standard
- Dash Size
- Quality Index (Standard)
- Material Code (Seal Ring)
- Material Code (O-Ring)

Notes:
1) Tolerances used are per ISO-286; ISO System of Limits and Fits. The tolerances are converted from metric and rounded to the nearest three place decimal.
2) The clearance stated as S in the Table 73 is for when the seal is specified with Slydring bearings. When not incorporating Slydring bearings, the diametral clearance should be reduced.

Table 74: Installation dimensions / TSS Part No.

Bore Diameter	Groove Diameter	Groove Width	TSS Part No.	Groove Width	TSS Part No.
D_N H9	d_1 h9	L_1 +.008		L_2 +.008	
.250	**.140**	**.093**	**PD000B006**	**.138**	**PD010B006**
.281	.171	.093	PD000B007	.138	PD010B007
.312	.202	.093	PD000B008	.138	PD010B008
.344	.234	.093	PD000B009	.138	PD010B009
.375	**.265**	**.093**	**PD000B010**	**.138**	**PD010B010**
.437	.327	.093	PD000B011	.138	PD010B011
.500	**.390**	**.093**	**PD000B012**	**.138**	**PD010B012**
.563	.452	.093	PD000B013	.138	PD010B013
.625	**.515**	**.093**	**PD000B014**	**.138**	**PD010B014**
.688	.577	.093	PD000B015	.138	PD010B015
.750	**.640**	**.093**	**PD000B016**	**.138**	**PD010B016**
.813	.702	.093	PD000B017	.138	PD010B017
.875	**.765**	**.093**	**PD000B018**	**.138**	**PD010B018**
.938	.827	.093	PD000B019	.138	PD010B019
1.000	**.824**	**.140**	**PD000B117**	**.171**	**PD010B117**
1.063	.886	.140	PD000B118	.171	PD010B118
1.125	.949	.140	PD000B119	.171	PD010B119
1.188	1.011	.140	PD000B120	.171	PD010B120
1.250	**1.074**	**.140**	**PD000B121**	**.171**	**PD010B121**
1.313	1.136	.140	PD000B122	.171	PD010B122
1.375	1.199	.140	PD000B123	.171	PD010B123
1.438	1.261	.140	PD000B124	.171	PD010B124
1.500	**1.324**	**.140**	**PD000B125**	**.171**	**PD010B125**
1.563	1.386	.140	PD000B126	.171	PD010B126
1.625	1.449	.140	PD000B127	.171	PD010B127
1.688	1.511	.140	PD000B128	.171	PD010B128
1.750	**1.574**	**.140**	**PD000B129**	**.171**	**PD010B129**
1.813	1.636	.140	PD000B130	.171	PD010B130
1.875	1.699	.140	PD000B131	.171	PD010B131
1.938	1.761	.140	PD000B132	.171	PD010B132
2.000	**1.824**	**.140**	**PD000B133**	**.171**	**PD010B133**
2.063	1.886	.140	PD000B134	.171	PD010B134
2.125	1.949	.140	PD000B135	.171	PD010B135
2.188	2.011	.140	PD000B136	.171	PD010B136
2.250	**2.074**	**.140**	**PD000B137**	**.171**	**PD010B137**
2.313	2.136	.140	PD000B138	.171	PD010B138
2.375	2.199	.140	PD000B139	.171	PD010B139
2.438	2.261	.140	PD000B140	.171	PD010B140
2.500	**2.324**	**.140**	**PD000B141**	**.171**	**PD010B141**
2.625	2.383	.187	PD000B229	.208	PD010B229

Bore Diameter	Groove Diameter	Groove Width	TSS Part No.	Groove Width	TSS Part No.
D_N H9	d_1 h9	L_1 +.008		L_2 +.008	
2.750	**2.508**	**.187**	**PD000B230**	**.208**	**PD010B230**
2.875	2.633	.187	PD000B231	.208	PD010B231
3.000	**2.758**	**.187**	**PD000B232**	**.208**	**PD010B232**
3.125	2.883	.187	PD000B233	.208	PD010B233
3.250	3.008	.187	PD000B234	.208	PD010B234
3.375	3.133	.187	PD000B235	.208	PD010B235
3.500	**3.258**	**.187**	**PD000B236**	**.208**	**PD010B236**
3.625	3.383	.187	PD000B237	.208	PD010B237
3.750	3.508	.187	PD000B238	.208	PD010B238
3.875	3.633	.187	PD000B239	.208	PD010B239
4.000	**3.758**	**.187**	**PD000B240**	**.208**	**PD010B240**
4.125	3.883	.187	PD000B241	.208	PD010B241
4.250	4.008	.187	PD000B242	.208	PD010B242
4.375	4.133	.187	PD000B243	.208	PD010B243
4.500	**4.258**	**.187**	**PD000B244**	**.208**	**PD010B244**
4.625	4.383	.187	PD000B245	.208	PD010B245
4.750	4.508	.187	PD000B246	.208	PD010B246
4.875	4.633	.187	PD000B247	.208	PD010B247
5.000	**4.526**	**.375**	**PD000B425**	**.408**	**PD010B425**
5.125	4.651	.375	PD000B426	.408	PD010B426
5.250	4.776	.375	PD000B427	.408	PD010B427
5.375	4.901	.375	PD000B428	.408	PD010B428
5.500	**5.026**	**.375**	**PD000B429**	**.408**	**PD010B429**
5.625	5.151	.375	PD000B430	.408	PD010B430
5.750	5.276	.375	PD000B431	.408	PD010B431
5.875	5.401	.375	PD000B432	.408	PD010B432
6.000	**5.526**	**.375**	**PD000B433**	**.408**	**PD010B433**
6.125	5.651	.375	PD000B434	.408	PD010B434
6.250	5.776	.375	PD000B435	.408	PD010B435
6.375	5.901	.375	PD000B436	.408	PD010B436
6.500	**6.026**	**.375**	**PD000B437**	**.408**	**PD010B437**
6.750	6.276	.375	PD000B438	.408	PD010B438
7.000	**6.526**	**.375**	**PD000B439**	**.408**	**PD010B439**
7.250	6.776	.375	PD000B440	.408	PD010B440
7.500	**7.026**	**.375**	**PD000B441**	**.408**	**PD010B441**
7.750	7.276	.375	PD000B442	.408	PD010B442
8.000	**7.526**	**.375**	**PD000B443**	**.408**	**PD010B443**
8.250	7.776	.375	PD000B444	.408	PD010B444
8.500	8.026	.375	PD000B445	.408	PD010B445

The sizes listed in **bold** font are preferred sizes (more likely to be available for immediate shipment). Other dimensions and all intermediate sizes up to 102 inches (2,600mm) diameter can be supplied. -

Double-Acting

Elastomer-Energized Turcon® Slipper Seal

Material:
Turcon® and POM

Turcon® CST Seal

Description

The CST Seal is a high-pressure heavy-duty piston seal with excellent leakage control and superior extrusion and wear resistance

The CST seal is a combination of a Turcon® -based slipper seal energized by an elastomer profile ring and completed with two Back-up rings (Zurcon®). It is manufactured with a predefined interference fit, which together with the squeeze of the elastomer part ensures a good sealing effect even at low system pressure. At higher pressures the elastomer part is energized by the system pressure and activates the slipper seal in the radial direction.

The back-up rings prevent the slipper seal from extrusion and ensure a long service life even under harsh conditions.

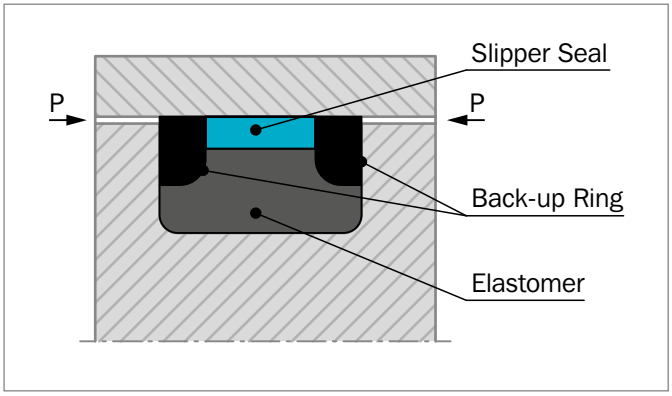

Figure 88: CST Seal

ADVANTAGES

- Simple groove design
- No stick-slip effect when starting for smooth operation
- Minimum static and dynamic coefficient of friction
- Increased clearance possible
- Due to larger extrusion gap, safe use even with soiled media
- Long service life

APPLICATION EXAMPLES

The CST Seal is the recommended sealing element for double-acting pistons of hydraulic cylinders working in very harsh conditions such as:

- Excavators
- Heavy duty hydraulic cylinders

TECHNICAL DATA

Operating conditions:

Pressure:	Up to 7,250 psi (50 MPa)
Velocity:	Up to 5 ft/s (1.5 m/s)
Temperature:	-60 °F to +250 °F (-50 °C to +121 °C)
Media:	Mineral oil based hydraulic fluids, water/oil and glycol/oil emulsions.
Clearance:	The maximum permissible radial clearance S_{max} is shown in Table 76, as a function of the operating pressure and functional diameter.

MATERIALS

Standard Applications:
For hydraulic components:
In mineral oils or medium with good lubricating performance

Seal ring:	Turcon® T46
Energizer:	Turel® NP
Back-up rings:	Zurcon® Z60
Material code for the set:	T46NP

Special Applications:
For special applications requiring other material combinations, please contact your local Trelleborg Sealing Solutions sales office.

Table 75: Turcon® Materials for Turcon® CST Seal®

Material, Applications, Properties	Code	Energiser Material Shore A	Code	Energiser Operating Temp.* °F	Mating Surface Material	PSI Max.
Turcon® M12 First material choice for seals in linear motion Overall improved properties For new constructions and updating For all commonly applied hydraulic fluids including fluids with low lubrication performance Lowest friction and best sliding properties Lowest wear on seals Improved absorption of abrassive contaminants Low wear or abrasion of counter surface BAM tested Mineral fiber and additives filled Color: Dark gray	M12	NBR-75	NP	–60 to +176	Steel Steel hardened Steel chrome plated (rod) Steel plated (rod) Cast iron Stainless steel Titanium	7,250
		NBR-70 Low temp.	T	-49 to +176		
		FKM-70	V	+14 to +392		
Turcon® T46 Standard material for hydraulics, high compressive strength, good sliding and wear properties, good extrusion resistance BAM tested Bronze-filled Color: Grayish to dark brown	T46	NBR-75	NP	–60 to +176	Steel tube Steel hardened Cast iron	7,250
		NBR-70 Low temp.	T	-49 to +176		
		FKM-70	V	+14 to +392		
Turcon® T29 For all lubricating and non-lubricating hydraulic fluids, hydraulic oils without zinc, soft mating surfaces, good extrusion resistance Surface texture not suitable for gases High carbon fiber-filled Color: Gray	T29	NBR-75	NP	-60 to +176	Steel Cast iron Stainless steel Aluminium Bronze	7,250
		NBR-70 Low temp.	T	-49 to +176		
		FKM-70	V	+14 to +392		
		EPDM-70	E**	-49 to +293		
Turcon® T42 For all lubricating and non-lubricating hydraulic fluids, good chemical resistance, good dielectric properties Glass fiber-filled + MoS2 Color: Gray to blue	T42	NBR-75	NP	-60 to +176	Steel tube Steel hardened Cast iron	5,800
		NBR-70 Low temp.	T	-49 to +176		
		FKM-70	V	+14 to +392		

* The O-Ring operation temperature is only valid in mineral hydraulic oil.

** Material not suitable for mineral oils.

BAM: Tested by "Bundes Anstalt Materialprüfung, Germany".

Highlighted materials are standard.

Installation Recommendation (Inch Piston Series)

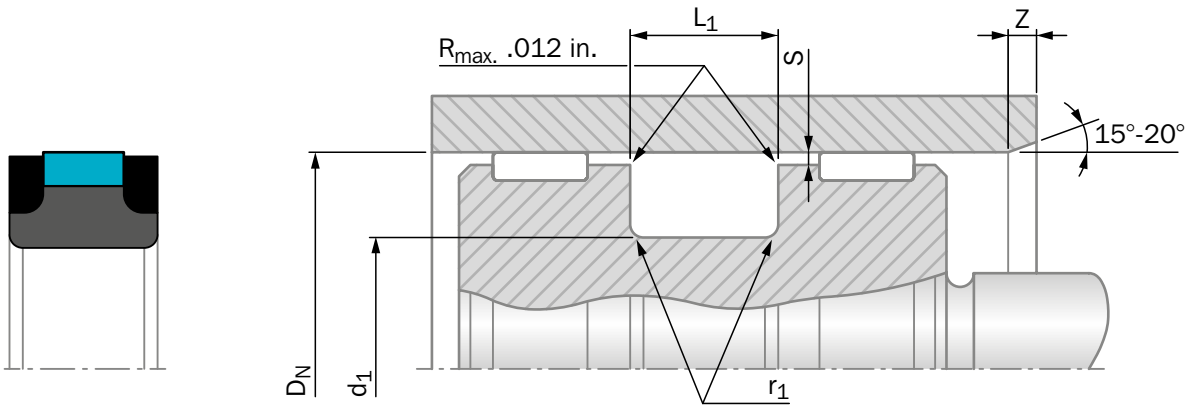

Figure 89: Installation drawing

1) The bore diameter H9 tolerance is recommended per ISO-286; ISO System of Limits and Fits. The tolerances are converted from metric and rounded to the nearest three place decimal.
2) The groove diameter h9 tolerance is recommended per ISO-286; ISO System of Limits and Fits. The tolerances are converted from metric and rounded to the nearest three place decimal.
3) The clearances stated as S in the above table are for the Turcon® CST Seal when specified with Slydring® bearings. When not incorporating Slydring® bearings, the diametral clearance should be reduced.
4) To determine minimum piston diameter D, subtract diametral clearance (2 x S_{max}) from the maximum bore.
5) Consult your sales office for diameters that exceed those listed in the below table.

Table 76: Installation recommendation

TSS Series No.	Bore Diameter D_N H9			Groove Diameter	Groove Width	Radius	Radial Clearance S_{max}*	
	Standard	Light Application	Heavy Duty	d_1 h9	L_1 +.010	$r_{1\,max}$	35 MPa 5000 psi	45 MPa 6500 psi
PK07	1.000 - 2.999	-	-	D_N -.373	.424	.020	.012	.009
PK08	3.000 - 4.999	-	-	D_N -.478	.579	.025	.018	.010
PK09	5.000 - 20.000	-	-	D_N -.726	.750	.035	.019	.012

* At pressures **>40 MPa (5.800 psi)** use diameter tolerance H8/f8 (bore/piston) in area of the seal.

ORDERING EXAMPLE

Turcon® CST Seal, complete

Bore Diameter:	D_N = 4.000 inches
TSS Part No.:	PK0804000 (from Table Table 77)
Seal:	Turcon® T46
Energizer:	Turel® NP
Back-up ring:	Zurcon® Z60
Material set-code:	T46NP

TSS Article No. PK 0 8 04000 - T46 NP

- TSS Series No.
- Zurcon® Backup Ring
- Cross Section Series
- Bore Diameter x 1000
- Quality Index (Standard)
- Material Code (Seal Ring)
- Material Code (Elastomer)

Table 77: Installation dimensions / TSS Part No.

Bore Diameter	Groove Diameter	Groove Width	TSS Part No.
D_N H9	d_1 h9	L_1 +.010	
1.000	.627	.424	PK0701000
1.063	.690	.424	PK0701063
1.125	.752	.424	PK0701125
1.188	.815	.424	PK0701188
1.250	**.877**	**.424**	**PK0701250**
1.313	.940	.424	PK0701313
1.375	1.002	.424	PK0701375
1.438	1.065	.424	PK0701438
1.500	**1.127**	**.424**	**PK0701500**
1.563	1.190	.424	PK0701563
1.625	1.252	.424	PK0701625
1.688	1.315	.424	PK0701688
1.750	**1.377**	**.424**	**PK0701750**
1.813	1.440	.424	PK0701813
1.875	1.502	.424	PK0701875
1.938	1.565	.424	PK0701938
2.000	**1.627**	**.424**	**PK0702000**
2.125	1.752	.424	PK0702125
2.250	**1.877**	**.424**	**PK0702250**
2.375	2.002	.424	PK0702375
2.500	**2.127**	**.424**	**PK0702500**
2.625	2.252	.424	PK0702625
2.750	**2.377**	**.424**	**PK0702750**
2.875	2.502	.424	PK0702875
3.000	**2.522**	**.579**	**PK0803000**
3.125	2.647	.579	PK0803125
3.250	**2.772**	**.579**	**PK0803250**
3.375	2.897	.579	PK0803375
3.500	**3.022**	**.579**	**PK0803500**
3.625	3.147	.579	PK0803625
3.750	**3.272**	**.579**	**PK0803750**
3.875	3.397	.579	PK0803875
4.000	**3.522**	**.579**	**PK0804000**
4.125	3.647	.579	PK0804125
4.250	**3.772**	**.579**	**PK0804250**
4.375	3.897	.579	PK0804375
4.500	**4.022**	**.579**	**PK0804500**
4.625	4.147	.579	PK0804625
4.750	**4.272**	**.579**	**PK0804750**
4.875	4.397	.579	PK0804875

Bore Diameter	Groove Diameter	Groove Width	TSS Part No.
D_N H9	d_1 h9	L_1 +.010	
5.000	**4.274**	**.750**	**PK0905000**
5.125	4.399	.750	PK0905125
5.250	4.524	.750	PK0905250
5.375	4.649	.750	PK0905375
5.500	**4.774**	**.750**	**PK0905500**
5.625	4.899	.750	PK0905625
5.750	5.024	.750	PK0905750
5.875	5.149	.750	PK0905875
6.000	**5.274**	**.750**	**PK0906000**
6.250	5.524	.750	PK0906250
6.500	**5.774**	**.750**	**PK0906500**
6.750	6.024	.750	PK0906750
7.000	**6.274**	**.750**	**PK0907000**
7.250	6.524	.750	PK0907250
7.500	**6.774**	**.750**	**PK0907500**
7.750	7.024	.750	PK0907750
8.000	**7.274**	**.750**	**PK0908000**
8.250	7.524	.750	PK0908250
8.500	7.774	.750	PK0908500
8.750	8.024	.750	PK0908750
9.000	**8.274**	**.750**	**PK0909000**
9.250	8.524	.750	PK0909250
9.500	8.774	.750	PK0909500
9.750	9.024	.750	PK0909750
10.000	**9.274**	**.750**	**PK0910000**
10.500	9.774	.750	PK0910500
11.000	10.274	.750	PK0911000
11.500	10.774	.750	PK0911500
12.000	**11.274**	**.750**	**PK0912000**
12.500	11.774	.750	PK0912500
13.000	12.274	.750	PK0913000
13.500	12.774	.750	PK0913500
14.000	13.274	.750	PK0914000
14.500	13.774	.750	PK0914500
15.000	14.274	.750	PK0915000
15.500	14.774	.750	PK0915500
16.000	**15.274**	**.750**	**PK0916000**
16.500	15.774	.750	PK0916500
17.000	16.274	.750	PK0917000
17.500	16.774	.750	PK0917500

Bore Diameter	Groove Diameter	Groove Width	TSS Part No.
D_N H9	d_1 h9	L_1 +.010	
18.000	17.274	.750	PK0918000
18.500	17.774	.750	PK0918500
19.000	18.274	.750	PK0919000
19.500	18.774	.750	PK0919500
20.000	19.274	.750	PK0920000

The sizes listed in **bold** font are preferred sizes (more likely to be available for immediate shipment). Other dimensions and all intermediate sizes up to 106 inches (2,700mm) diameter can be supplied.

Double-Acting

O-Ring-Energized Slipper Seal Elastomer Contact

Material:
Turcon® , Zurcon® and Elastomer

Turcon® AQ-Seal®

Description

The Turcon® AQ-Seal® is a double-acting seal consisting of a seal ring of high-grade modified Turcon® material, a Quad-Ring® and an O-Ring as an energizing element.

The Turcon® seal ring and the Quad-Ring® Seal together assume the dynamic sealing function while the O-Ring performs the static sealing function.

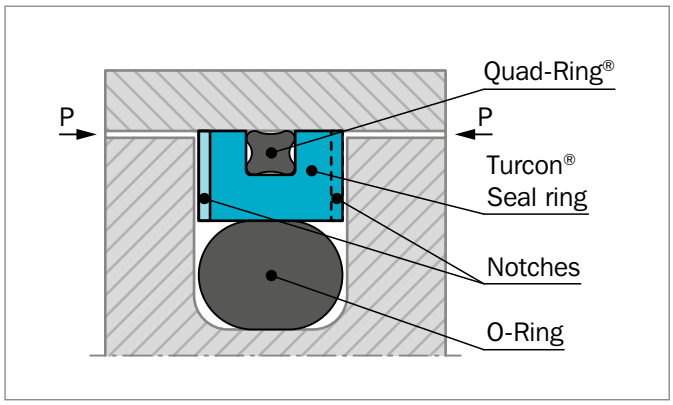

Figure 90: Turcon® AQ-Seal®

ADVANTAGES

- High sealing effect in applications requiring media separation, e.g. fluid/fluid or fluid/gas
- Double security through the combination of low-friction special materials with elastomer seals
- Simple groove design, small installation space, interchangeable with Turcon® Glyd Ring® , Turcon® Glyd Ring® T and Turcon® Stepseal® K installation according to ISO 7425/1
- Outstanding sliding properties, no stick-slip effect

APPLICATION EXAMPLES

The Turcon® AQ-Seal® is the recommended sealing element for double-acting pistons of accumulators and positioning and holding cylinders for:

- Machine tools
- Presses
- Accumulators
- Stabilizers
- Heavy duty suspension cylinders

TECHNICAL DATA

Operating pressure:	5,800 psi (40 MPa)
Velocity:	Up to 6.5 ft/s (2 m/s)
Temperature:	-49 °F to +392 °F (-45 °C to +200 °C)* (depending on O-Ring and Quad-Ring® Seal material). (For applications at low temperatures below -22 °F (-30 °C), please contact us).
Media:	For all common hydraulic fluids, including bio-oils and gases.
Clearance:	The maximum permissible radial clearance S_{max} is shown in Table 79, as a function of the operating pressure and functional diameter.

IMPORTANT NOTE

The above data are maximum values and cannot be used at the same time, e.g. the maximum operating speed depends on material type, pressure, temperature and gap value. Temperature range also depends on media.

* In the case of unpressurized applications in temperatures below 32 °F (0 °C) please contact our application engineers for assistance!

MATERIALS

Standard Application:
For hydraulic components in mineral oils or medium with good lubricating performance. Mineral oils and gases.

Seal ring: Turcon® T46

Energizer: NBR, 70 Shore A N

Set code: T46N

Standard Application:
For special applications requiring other material combinations, please contact your local Trelleborg Sealing Solutions sales office.

Table 78: Turcon® Materials for Turcon® AQ-Seal®

Material, Applications, Properties	Code	O-Ring Material Shore A	Code	O-Ring Operating Temp.* °F	Mating Surface Material	PSI Max.
Turcon® M12 First material choice for seals in linear motion Overall improved properties For new constructions and updating For all commonly applied hydraulic fluids including fluids with low lubrication performance Lowest friction and best sliding properties Lowest wear on seals Improved absorption of abrassive contaminants Low wear or abrasion of counter surface BAM tested Mineral fiber and additives filled Color: Dark gray	M12	NBR-70	N	-22 to +212	Steel Steel hardened Steel chrome plated (rod) Steel plated (rod) Cast iron Stainless steel Titanium	5,800
		NBR-70 Low temp.	T	-49 to +176		
		FKM-70	V	+14 to +392		
Turcon® T46 Standard material for hydraulics, high compressive strength, good sliding and wear properties, good extrusion resistance BAM tested Bronze-filled Color: grayish to dark brown	T46	NBR-70	N	-22 to +212	Steel tubes Steel hardened Cast iron	5,800
		NBR-70 Low temp.	T	-49 to +176		
		FKM-70	V	+14 to +392		
Turcon® T40 For all lubricating and non-lubricating hydraulic fluids, hydraulic oils without zinc, water hydraulic, soft mating surfaces Surface texture not suitable for gases Carbon fiber-filled Color: gray	T40	NBR-70	N	-22 to +212	Steel Cast iron Stainless steel Aluminum Bronze Alloys	3,625
		NBR-70 Low temp.	T	-49 to +176		
		FKM-70	V	+14 to +392		
		EPDM-70	E**	-49 to +293		
Turcon® T10 For oil hydraulic and pneumatic for all lubricating and non-lubricating fluids, high extrusion resistance, good chemical resistance BAM tested Carbon, graphite-filled Color: black	T10	NBR-70	N	-22 to +212	Steel Stainless steel	5,800
		NBR-70 Low temp.	T	-49 to +176		
		FKM-70	V	+14 to +392		
		EPDM-70	E**	-49 to +293		

* The O-Ring operation temperature is only valid in mineral hydraulic oil.

** Material not suitable for mineral oils.

BAM: Tested by "Bundes Anstalt Materialprüfung, Germany".

Highlighted materials are standard.

Installation Recommendation (Inch Piston Series)

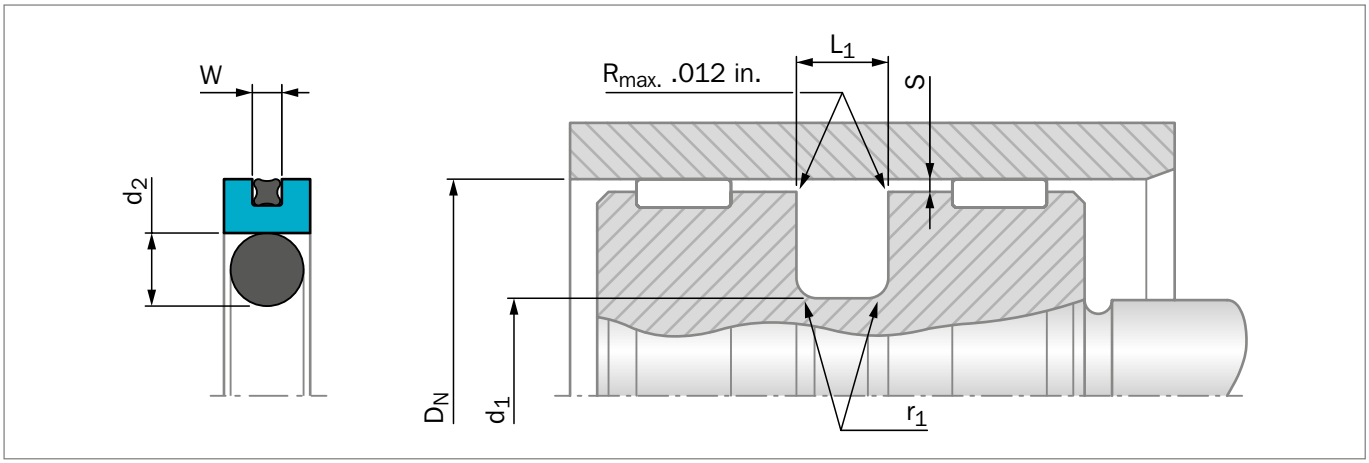

Figure 91: Installation drawing

Table 79: Installation recommendation

Bore Diameter D_N H9				Groove Diameter	Groove Width	Radius	Radial Clearance S_{max}			O-Ring Cross-Section	X-Ring Cross-Section
Standard Application		Light Application									
TSS Series No.	Diameter Range	TSS Series No.	Diameter Range	d_1 h9	L_1 +.008	r_1 max	10 MPa 1500 psi	20 MPa 3000 psi	40 MPa 5800 psi	d_2	W
PQE0	.625 - 1.563	PQE4	1.564 - 3.125	D_N -.433	.165	.040	.010	.006	.004	.139	.070
PQE0	1.564 - 3.125	PQE4	3.126 - 5.250	D_N -.610	.248	.050	.012	.008	.006	.210	.070
PQE1	3.126 - 5.250	PQE5	5.251 - 9.975	D_N -.827	.319	.070	.012	.008	.006	.275	.103
PQE1	5.251 - 9.975	-	-	D_N -.965	.319	.070	.012	.008	.006	.275	.103
PQE2	9.976 - 18.225	-	-	D_N -1.102	.374	.100	.018	.012	.010	.330	.139
PQE3	18.226 - 27.500	-	-	D_N -1.378	.453	.120	.022	.016	.014	.394	.139

All intermediate sizes can be supplied with special elastomers on request.

ORDERING EXAMPLE

Turcon® AQ-Seal® , complete with O-Ring and Quad-Ring® Seal, recommended range, Series PQE4 (from Table 79)

Bore Diameter:	D_N = 4.000 inches
TSS Part No.	PQE404000 (from Table 80)

Select the material from Table 78. The corresponding code numbers are appended to the TSS Part No. (from Table 80). Together they form the TSS Article No. For all intermediate sizes not shown in Table 80, the TSS Article No. can be determined from the example opposite.

TSS Article No. PQE4 04000 - T46 N

- TSS Series No. — PQE4
- Bore Diameter x 1000 — 04000
- Quality Index (Standard) — -
- Material Code (Seal Ring) — T46
- Material Code (O-Ring, Quad-Ring®) — N

Table 80: Installation dimensions / TSS Part No.

Bore Diameter	Groove Diameter	Groove Width	TSS Part No.
D_N H9	d_1 h9	L_1 +.008	
1.500	1.067	.165	PQE001500
1.563	1.130	.165	PQE001563
1.625	1.192	.165	PQE401625
1.688	1.255	.165	PQE401688
1.750	1.317	.165	PQE401750
1.813	1.380	.165	PQE401813
1.875	1.442	.165	PQE401875
1.938	1.505	.165	PQE401938
2.000	**1.567**	**.165**	**PQE402000**
2.125	1.692	.165	PQE402125
2.250	1.817	.165	PQE402250
2.375	1.942	.165	PQE402375
2.500	**2.067**	**.165**	**PQE402500**
2.625	2.192	.165	PQE402625
2.750	2.317	.165	PQE402750
2.875	2.442	.165	PQE402875
3.000	**2.567**	**.165**	**PQE403000**
3.125	2.692	.165	PQE403125
3.250	2.640	.248	PQE403250
3.375	2.765	.248	PQE403375
3.500	**2.890**	**.248**	**PQE403500**
3.625	3.015	.248	PQE403625
3.750	3.140	.248	PQE403750
3.875	3.265	.248	PQE403875
4.000	**3.390**	**.248**	**PQE404000**
4.125	3.515	.248	PQE404125
4.250	3.640	.248	PQE404250
4.375	3.765	.248	PQE404375
4.500	**3.890**	**.248**	**PQE404500**
4.625	4.015	.248	PQE404625
4.750	4.140	.248	PQE404750
4.875	4.265	.248	PQE404875
5.000	**4.390**	**.248**	**PQE405000**
5.125	4.515	.248	PQE405125
5.250	4.640	.248	PQE405250
5.375	4.548	.319	PQE505375
5.500	**4.673**	**.319**	**PQE505500**
5.625	4.798	.319	PQE505625
5.750	4.923	.319	PQE505750
6.000	**5.173**	**.319**	**PQE506000**
6.250	5.423	.319	PQE506250
6.500	5.673	.319	PQE506500
6.750	5.923	.319	PQE506750
7.000	**6.173**	**.319**	**PQE507000**
7.250	6.423	.319	PQE507250
7.500	6.673	.319	PQE507500
7.750	6.923	.319	PQE507750
8.000	**7.173**	**.319**	**PQE508000**
8.250	7.423	.319	PQE508250
8.500	7.673	.319	PQE508500
8.750	7.923	.319	PQE508750
9.000	**8.173**	**.319**	**PQE509000**
9.250	8.423	.319	PQE509250
9.500	8.673	.319	PQE509500
9.750	8.923	.319	PQE509750
10.000	**8.898**	**.374**	**PQE210000**
10.500	9.398	.374	PQE210500
11.000	9.898	.374	PQE211000
11.500	10.398	.374	PQE211500
12.000	**10.898**	**.374**	**PQE212000**
12.500	11.398	.374	PQE212500
13.000	11.898	.374	PQE213000
13.500	12.398	.374	PQE213500
14.000	12.898	.374	PQE214000
14.500	13.398	.374	PQE214500
15.000	13.898	.374	PQE215000
15.500	14.398	.374	PQE215500
16.000	**14.898**	**.374**	**PQE216000**
16.500	15.398	.374	PQE216500
17.000	15.898	.374	PQE217000
17.500	16.398	.374	PQE217500
18.000	16.898	.374	PQE218000
18.500	17.122	.453	PQE318500
19.000	17.622	.453	PQE319000
19.500	18.122	.453	PQE319500
20.000	**18.622**	**.453**	**PQE320000**

The sizes listed in **bold** font are preferred sizes (more likely to be available for immediate shipment). Other dimensions and all intermediate sizes up to 100 inches (2540mm) diameter can be supplied.

Double-Acting

O-Ring-Energized Slipper Seal Elastomer Contact

Material:
Turcon® , Zurcon® and Elastomer

Turcon® AQ-Seal® 5

Description

The Turcon® AQ-Seal® 5 is a patented development of the proven standard Turcon® AQ-Seal® .

The seal profile of the Turcon® ring has been redesigned on both the dynamic and static sealing surfaces. Two O-Rings are used to energize the seal instead of one.

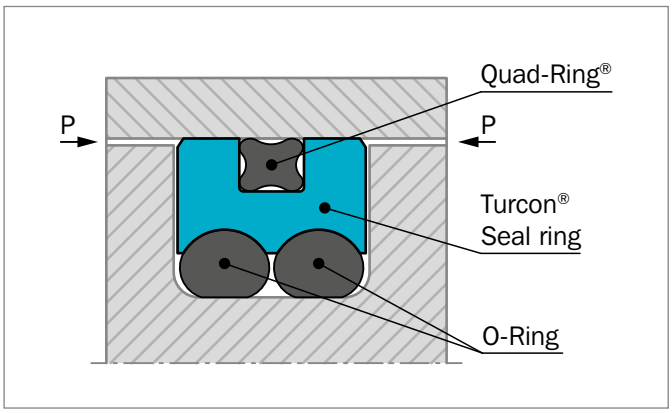

Figure 92: Turcon® AQ-Seal® 5

The AQ-Seal® 5 combines the benefits of a low-friction Turcon® slipper seal with the high sealing characteristics of an elastomeric seal by incorporating a limited foot print Quad-Ring® Seal in the dynamic sealing face. This optimizes leakage control while minimizing friction.

The unique characteristics of the AQ-Seal® 5 are the special seal profile with a defined seal edge and the use of two O-Rings as energizing elements to optimize the pressure profile and to reduce the force of attack at gas permeability.

ADVANTAGES

- High sealing effect in applications requiring media separation, e.g. fluid/fluid or fluid/gas
- Double security through the combination of low-friction special materials with elastomer seals
- Low gas permeation rate
- Higher pressure application, higher sliding speed compared to the AQ-Seal®
- Outstanding sliding properties, no stick-slip effect

APPLICATION EXAMPLES

The Turcon® AQ-Seal® 5 is the recommended sealing element for double acting pistons of accumulators and positioning and holding cylinders for:

- Mobil hydraulics
- Cranes
- Stabilizers
- Heavy duty suspension cylinders
- Hydro-pneumatic suspensions for heavy vehicles
- Machine tools
- Presses
- Rolling mills
- Servo hydraulics
- Offshore equipment
- Cylinders with retaining function over longer periods such as jacks and support cylinders

TECHNICAL DATA

Operating conditions

Pressure:	Up to 7,250 psi (50 MPa)
Velocity:	Up to 10 ft/s (3 m/s)
Temperature:	-49 °F to +392 °F (-45 °C to +200 °C)** (depending on O-Ring and Quad-Ring® Seal material). (For applications at low temperatures below -22 °F (-30 °C), please contact us).
Media:	For all common hydraulic fluids, including bio-oils and gases.
Clearance:	The maximum permissible radial clearance S_{max} is shown in Table 82, as a function of the operating pressure and functional diameter.

IMPORTANT NOTE

The above data are maximum values and cannot be used at the same time, e.g. the maximum operating speed depends on material type, pressure, temperature and gap value. Temperature range also depends on media.

** In the case of unpressurized applications in temperatures below 32 °F (0 °C) please contact our application engineers for assistance!

MATERIALS

Standard Application:
For hydraulic components in mineral oils or medium with good lubricating performance.

Mineral oils and gases.

Seal ring: Turcon® T46

Energizer: NBR, 70 Shore A N

Set code: T46N

Special Application:
For special applications requiring other material combinations, please contact your local Trelleborg Sealing Solutions sales office.

Table 81: Turcon® Materials for Turcon® AQ-Seal® 5

Material, Applications, Properties	Code	O-Ring Material Shore A	Code	O-Ring Operating Temp.* °F	Mating Surface Material	PSI Max.
Turcon® M12 First material choice for seals in linear motion Overall improved properties For new constructions and updating For all commonly applied hydraulic fluids including fluids with low lubrication performance Lowest friction and best sliding properties Lowest wear on seals Improved absorption of abrassive contaminants Low wear or abrasion of counter surface BAM tested Mineral fiber and additives filled Color: Dark gray	M12	NBR-70	N	-22 to +212	Steel Steel hardened Steel chrome plated (rod) Steel plated (rod) Cast iron Stainless steel Titanium	7,250
		NBR-70 Low temp.	T	-49 to +176		
		FKM-70	V	+14 to +392		
Turcon® T46 Standard material for hydraulics, high compressive strength, good sliding and wear properties, good extrusion resistance BAM tested Bronze-filled Color: grayish to dark brown	T46	NBR-70	N	-22 to +212	Steel tubes Steel hardened Cast iron	7,250
		FKM-70	V	+14 to +392		
Turcon® T40 For all lubricating and non-lubricating hydraulic fluids, hydraulic oils without zinc, water hydraulic, soft mating surfaces Surface texture not suitable for gases Carbon fiber-filled Color: gray	T40	NBR-70	N	-22 to +212	Steel Cast iron Stainless steel Aluminum Bronze Alloys	3,625
		FKM-70	V	+14 to +392		
		EPDM-70	E**	-49 to +293		

Table continues on next page

Material, Applications, Properties	Code	O-Ring Material Shore A	Code	O-Ring Operating Temp.* °F	Mating Surface Material	PSI Max.
Turcon® T10 For oil hydraulic and pneumatic for all lubricating and non-lubricating fluids, high extrusion resistance, good chemical resistance BAM tested Carbon, graphite-filled Color: black	T10	NBR-70	N	-22 to +212	Steel Stainless steel	8,700
		FKM-70	V	+14 to +392		
		EPDM-70	E**	-49 to +293		

* The O-Ring operation Temperature is only valid in mineral hydraulic oil.

** Material not suitable for mineral oils.

BAM: Tested by "Bundes Anstalt Materialprüfung, Germany".

Highlighted materials are standard.

Installation Recommendation (Inch Piston Series)

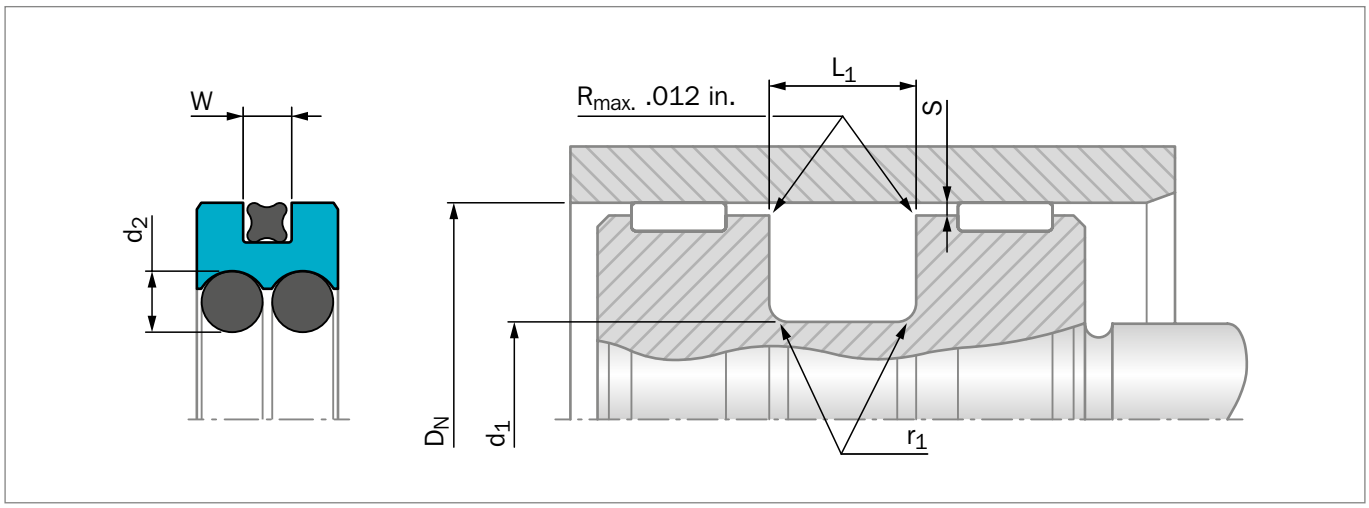

Figure 93: Installation drawing

Table 82: Installation recommendation

TSS Series No.	Bore Diameter	Groove Diameter	Groove Width	Radius	Radial Clearance S_{max}		O-Ring Cross-Section	X-Ring Cross-Section
	D_N H9	d_1 h9	L_1 +.008	$r_{1\ max}$	10 MPa 1500 psi	20 MPa 3000 psi	d_2	W
PQ41	.750 - 5.500	D_N -.394	.248	.005	.012	.009	.103	.070
PQ42	.750 - 9.975	D_N -.512	.326	.010	.013	.010	.139	.103
PQ43	1.250 - 18.000	D_N -.709	.484	.015	.014	.011	.210	.139
PQ44	5.500 - 26.000	D_N -1.220	.642	.015	.016	.013	.275	.210

All intermediate sizes can be supplied with special elastomers on request.

ORDERING EXAMPLE

Turcon® AQ-Seal® 5, complete with O-Ring and Quad-Ring® Seal, recommended range, Series PQ41 (from Table 82)

Bore Diameter:	D_N = 2.000 inches
TSS Part No.:	PQ4102000 (from Table 83)

Select the material from Table 81. The corresponding code numbers are appended to the TSS Part No. (from Table 83). Together they form the TSS Article No.
For all intermediate sizes not shown in Table 83, the TSS Article No. can be determined from the example opposite.

TSS Article No. PQ41 02000 - T46 N

- TSS Series No. — PQ41
- Bore Diameter x 1000 — 02000
- Quality Index (Standard) — -
- Material Code (Seal Ring) — T46
- Material Code (O-Ring, Quad-Ring®) — N

For diameters ≥100 inches please consult your Trelleborg Sealing Solutions sales office for special part no.

Table 83: Installation dimensions / TSS Part No.

Bore Diameter	Groove Diameter	Groove Width	TSS Part No.
D_N H9	d_1 h9	L_1 +.008	
1.500	1.106	.248	PQ4101500
1.563	1.169	.248	PQ4101563
1.625	1.231	.248	PQ4101625
1.688	1.294	.248	PQ4101688
1.750	1.356	.248	PQ4101750
1.813	1.419	.248	PQ4101813
1.875	1.481	.248	PQ4101875
1.938	1.544	.248	PQ4101938
2.000	**1.606**	**.248**	**PQ4102000**
2.125	1.731	.248	PQ4102125
2.250	**1.856**	**.248**	**PQ4102250**
2.375	1.981	.248	PQ4102375
2.500	**2.106**	**.248**	**PQ4102500**
2.625	2.231	.248	PQ4102625
2.750	**2.356**	**.248**	**PQ4102750**
2.875	2.481	.248	PQ4102875
3.000	**2.488**	**.326**	**PQ4203000**
3.125	2.613	.326	PQ4203125
3.250	2.738	.326	PQ4203250
3.375	2.863	.326	PQ4203375
3.500	**2.988**	**.326**	**PQ4203500**
3.625	3.113	.326	PQ4203625
3.750	3.238	.326	PQ4203750
3.875	3.363	.326	PQ4203875
4.000	**3.488**	**.326**	**PQ4204000**
4.125	3.613	.326	PQ4204125
4.250	3.738	.326	PQ4204250
4.375	3.863	.326	PQ4204375
4.500	**3.988**	**.326**	**PQ4204500**
4.625	4.113	.326	PQ4204625
4.750	4.238	.326	PQ4204750
4.875	4.363	.326	PQ4204875
5.000	**4.291**	**.484**	**PQ4305000**
5.125	4.416	.484	PQ4305125
5.250	4.541	.484	PQ4305250
5.375	4.666	.484	PQ4305375
5.500	**4.791**	**.484**	**PQ4305500**
5.625	4.916	.484	PQ4305625
5.750	5.041	.484	PQ4305750
5.875	5.166	.484	PQ4305875

Bore Diameter	Groove Diameter	Groove Width	TSS Part No.
D_N H9	d_1 h9	L_1 +.008	
6.000	**5.291**	**.484**	**PQ4306000**
6.250	5.541	.484	PQ4306250
6.500	5.791	.484	PQ4306500
6.750	6.041	.484	PQ4306750
7.000	**6.291**	**.484**	**PQ4307000**
7.250	6.541	.484	PQ4307250
7.500	6.791	.484	PQ4307500
7.750	7.041	.484	PQ4307750
8.000	**7.291**	**.484**	**PQ4308000**
8.250	7.541	.484	PQ4308250
8.500	7.791	.484	PQ4308500
8.750	8.041	.484	PQ4308750
9.000	**8.291**	**.484**	**PQ4309000**
9.250	8.541	.484	PQ4309250
9.500	8.791	.484	PQ4309500
9.750	9.041	.484	PQ4309750
10.000	**9.291**	**.484**	**PQ4310000**
10.500	9.791	.484	PQ4310500
11.000	10.291	.484	PQ4311000
11.500	10.791	.484	PQ4311500
12.000	**10.780**	**.642**	**PQ4412000**
12.500	11.280	.642	PQ4412500
13.000	11.780	.642	PQ4413000
13.500	12.280	.642	PQ4413500
14.000	**12.780**	**.642**	**PQ4414000**
14.500	13.280	.642	PQ4414500
15.000	13.780	.642	PQ4415000
15.500	14.280	.642	PQ4415500
16.000	**14.780**	**.642**	**PQ4416000**
16.500	15.280	.642	PQ4416500
17.000	15.780	.642	PQ4417000
17.500	16.280	.642	PQ4417500
18.000	**16.780**	**.642**	**PQ4418000**
18.500	17.280	.642	PQ4418500
19.000	17.780	.642	PQ4419000
19.500	18.280	.642	PQ4419500
20.000	**18.780**	**.642**	**PQ4420000**

The sizes listed in **bold** font are preferred sizes (more likely to be available for immediate shipment). Other dimensions and all intermediate sizes up to 100 inches (2,540mm) diameter can be supplied.

Single-Acting

Spring-Energized Turcon® U-Cup

Material:
Turcon® or Zurcon®

Turcon® Variseal® M2

Description

The Turcon® Variseal® M2 is a single-acting seal consisting of a U-shaped seal jacket and a V-shaped corrosion-resistant spring.

The Variseal® M2 has an asymmetric seal profile. The heavy profile of its dynamic lip with an optimized front angle offers good leakage control, reduced friction and long service life.

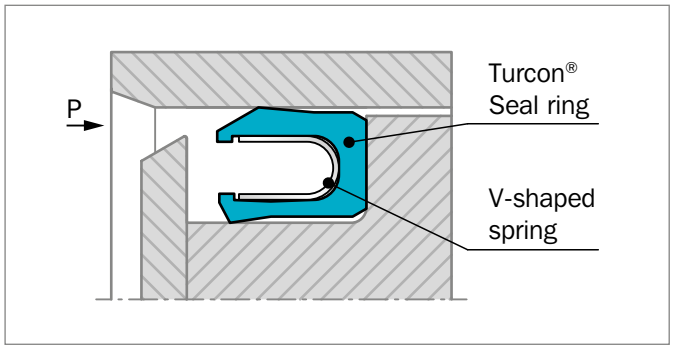

Figure 94: Turcon® Variseal® M2

At low and zero pressure, the metal spring provides the primary sealing force. As the system pressure increases, the main sealing force is achieved by the system pressure and ensures a tight seal from zero to high pressure.

The possibility of matching suitable materials for the seal and the spring allows use in a wide range of applications going beyond the field of hydraulics, e.g. in the chemical, pharmaceutical and foodstuffs industries.

The Variseal® M2 can be sterilized and is available in a special Hi-Clean version where the spring cavity is filled with a silicone gel preventing contaminants from being entrapped in the seal. This design also works well in applications involving mud, slurries or adhesives to keep grit from packing into the seal cavity and inhibiting the spring action.

For applications with highly viscous media, please contact your local sales office.

Variseal® M2 seals can be installed in grooves to AS4716 and ISO 3771. The seals can only be installed to a limited extent in closed grooves. For installation instructions, see Table 50.

ADVANTAGES

- Resistant to most fluids and chemicals
- Low coefficients of friction
- Stick-slip-free operating for precise control
- High abrasion resistance and dimensional stability
- Can handle rapid changes in temperature
- No contamination in contact with foodstuffs, pharmaceutical and medicinal fluids
- Sterilizable
- Unlimited shelf life

APPLICATION EXAMPLES

The Turcon® Variseal® M2 is the recommended sealing element for all applications requiring stick-slip-free operation as well as chemical resistance against almost all media.
Some applications include:

- Valves
- Pumps
- Separators
- Actuators
- Dosing devices

It requires a mating surface of high quality to avoid high wear rates.

TECHNICAL DATA

Operating conditions

Pressure:	For static loads: 5,800 psi (40 MPa) For dynamic loads: 2,900 psi (20 MPa)
Speed:	Reciprocating up to 50 ft/s (15 m/s) Rotating up to 4.2 ft/s (1.3 m/s)
Temperature:	-94 °F to +572 °F (-70 °C to +300 °C) For specific applications at lower temperatures, please contact your local Trelleborg Sealing Solutions sales office.
Media:	Virtually all fluids, chemicals and gases

IMPORTANT NOTE

The above data are maximum values and cannot be used at the same time. e.g. the maximum operating speed depends on material type, pressure, temperature and gap value. Temperature range also dependent on medium.

MATERIALS

All materials used are physiologically safe. They have no odor or taste-affecting substances.

The following material combination has proved effective for most fluid applications:

Seal ring: Turcon® T40
Spring: Stainless steel, Material No. AISI 301
Material code S

For gas applications use:

Seal ring: T05 or Z80

For use in accordance with the demands of the Food and Drug Administration, suitable materials are available on request.

Table 84: Turcon® and Zurcon® Materials for Variseal® M2

Material, Applications, Properties	Code	Spring Material	Code	Operating Temp.* °F	Mating Surface Material	PSI Max.
Turcon® T40 For all lubricating and non-lubricating hydraulic fluids, hydraulic oils without zinc, water hydraulic, hard mating surfaces Surface texture not suitable for gases Carbon fiber-filled Color: gray	T40	AISI 301	S	-94 to +500	Steel Cast iron Stainless steel Aluminium Bronze Alloys	5,800
Turcon® T05 For all lubricating hydraulic fluids, soft mating surfaces, very good sliding properties, low friction Color: turquoise	T05	AISI 301	S	-94 to +500	Steel hardened	2,900
Zurcon® Z80 For lubricating and non-lubricating hydraulic fluids, high abrasion resistance, very good chemical resistance, limited temperature resistance FDA compliance Ultra high molecular weight polyethylene Color: white to off-white	Z80	AISI 301	S	-94 to +176	Steel Stainless steel Aluminium Bronze Ceramic coating	5,800
Zurcon® Z48 For tight sealing with long wear life, in applications without high temperatures or corrosive chemicals Colour: black	Z48	AISI 301	S	-76 to +266	Steel Steel chrome plated Cast iron Stainless steel Aluminium Bronze Alloys Ceramic coating	5,800

* Depending on media.

Highlighted materials are standard.

SPRING MATERIALS

The standard spring material for Turcon® Variseal® is stainless steel (spring code S).

Table 85: Spring Material

Media	Spring materials	Spring order code
For General use e.g. Oil Grease Air Water, steam Solvents Food, drugs Gas	**Stainless steel** DIN Mat No. 1.4310/1.4319 AISI 301/302 UNS 30100	S (Standard spring material)
For use in corrosive media e.g. Acids Caustics Seawater	**Hastelloy®** C-276 DIN Mat No. 2.4819 UNS N10276	H
For petrochemical use e.g. Crude oil Sour gas	**Elgiloy®** 1) DIN Mat No. 2.4711 UNSR30003	E

® Hastelloy is a registered trademark of Haynes International, Inc.
® Elgiloy is a registered trademark of the Elgiloy Specialty Metals
Alternative brand may be used.
1) NACE-approval

Groove Design

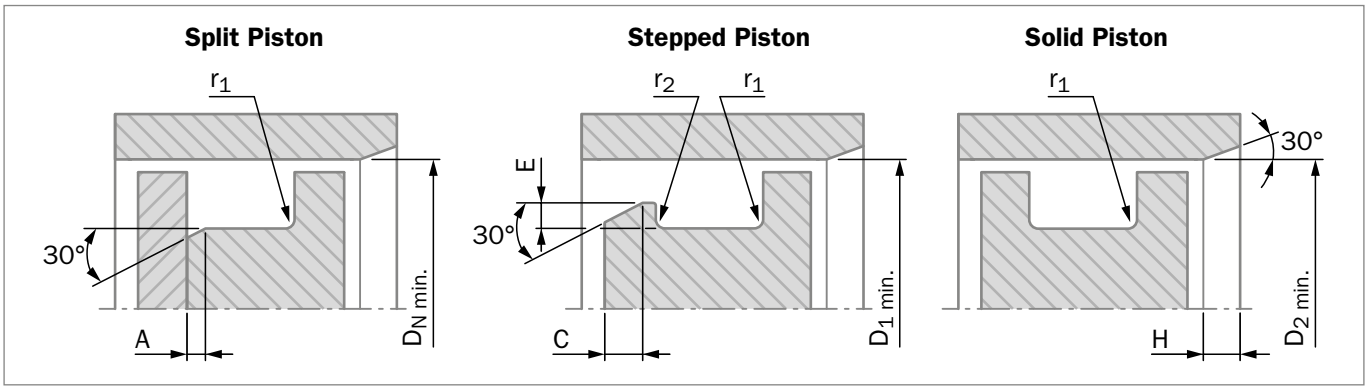

Figure 95: Variseal Groove Configurations

Installation lead-in chamfers and steps to include blend radii and are to be polished.

Table 86: Dimensions for Groove Designs

Series	Piston Diameter Recommendations		
	Split Groove Ø D_N Minimum	Stepped Groove Ø D_1 Minimum	Solid Groove Ø D_2 Minimum
000	.236	.453	1.375
100	.394	.689	2.000
200	.630	.787	2.750
300	1.102	1.102	4.125
400	1.772	1.772	5.500
500	3.937	3.937	10.000

Installation Recommendation (Inch Piston Series)

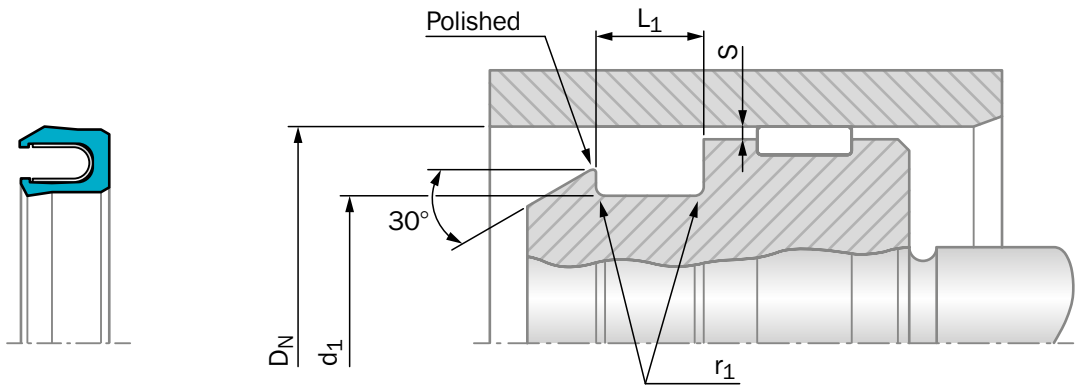

Figure 96: Installation drawing

Table 87: Installation recommendation

TSS Series No.	Groove Depth	Groove Width	Radius	Radial Clearance S_{max}*			
	D_N - d_1 (Ref.)	L_1 +.010	r_1 max	2 MPa 300 psi	10 MPa 1500 psi	20 MPa 3000 psi	40 MPa 5000 psi
PVAA	.062	.094	010	.008	.004	.003	.002
PVAB	.093	.141	.015	.010	.006	.004	.003
PVAC	.125	.188	.015	.014	.008	.006	.003
PVAD	.187	.281	.015	.020	.010	.008	.004
PVAE	.250	.375	.020	.024	.012	.010	.005
PVAG	.375	.591	.020	.030	.015	.012	.006

* At pressures **>40 MPa (5,800 psi)** use diameter tolerance H8/f8 (bore/piston) in area of the seal.

ORDERING EXAMPLE

Turcon® Variseal® M2, standard range, Series PVAD (from Table 87)

Bore Diameter:	D_N = 2.500 inches
TSS Part No.:	PVADNB330 (from Table 88)

Select the material from Table 84. The corresponding code numbers are appended to the TSS Part No. (from Table 87). Together they form the TSS Article No.
For all intermediate sizes not shown in Table 87, the TSS Article No. can be determined from the example opposite.

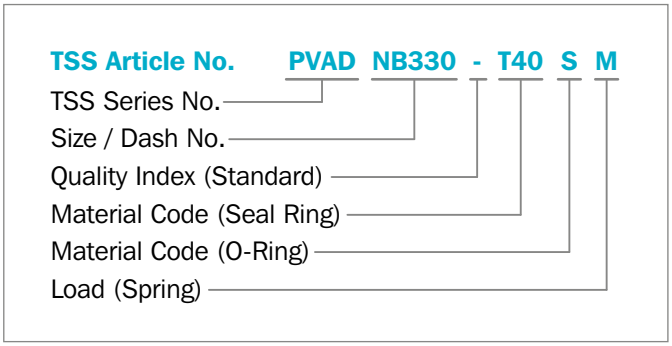

Table 88: Installation dimensions / TSS Part No.

Bore Diameter	Groove Diameter	Groove Width	TSS Part No.
D_N H9	d_1 h9	L_1 +.010	
.250	.125	.094	PVAANB006
.313	.188	.094	PVAANB008
.375	.187	.141	PVABNB106
.438	.250	.141	PVABNB108
.500	.312	.141	PVABNB109
.563	.375	.141	PVABNB110
.625	.437	.141	PVABNB111
.688	.500	.141	PVABNB112
.750	**.500**	**.188**	**PVACNB206**
.813	.563	.188	PVACNB207
.875	.625	.188	PVACNB208
.938	.688	.188	PVACNB209
1.000	**.750**	**.188**	**PVACNB210**
1.063	.813	.188	PVACNB211
1.125	.875	.188	PVACNB212
1.188	.938	.188	PVACNB213
1.250	**1.000**	**.188**	**PVACNB214**
1.313	1.063	.188	PVACNB215
1.375	1.125	.188	PVACNB216
1.438	1.188	.188	PVACNB217
1.500	**1.125**	**.281**	**PVADNB320**
1.625	1.250	.281	PVADNB322
1.750	1.375	.281	PVADNB324
1.875	1.500	.281	PVADNB325
2.000	**1.625**	**.281**	**PVADNB326**
2.125	1.750	.281	PVADNB327
2.250	1.875	.281	PVADNB328
2.375	2.000	.281	PVADNB329
2.500	**2.125**	**.281**	**PVADNB330**
2.625	2.250	.281	PVADNB331
2.750	2.375	.281	PVADNB332
2.875	2.500	.281	PVADNB333
3.000	**2.625**	**.281**	**PVADNB334**
3.125	2.750	.281	PVADNB335
3.250	2.875	.281	PVADNB336
3.375	3.000	.281	PVADNB337
3.500	**3.125**	**.281**	**PVADNB338**
3.625	3.250	.281	PVADNB339
3.750	3.375	.281	PVADNB340
3.875	3.500	.281	PVADNB341
4.000	**3.625**	**.281**	**PVADNB342**
4.125	3.750	.281	PVADNB343
4.250	3.875	.281	PVADNB344
4.375	4.000	.281	PVADNB345
4.500	**4.125**	**.281**	**PVADNB346**
4.625	4.125	.375	PVAENB422
4.750	4.250	.375	PVAENB423
4.875	4.375	.375	PVAENB424
5.000	**4.500**	**.375**	**PVAENB425**
5.125	4.625	.375	PVAENB426
5.250	4.750	.375	PVAENB427
5.375	4.875	.375	PVAENB428
5.500	**5.000**	**.375**	**PVAENB429**
5.625	5.125	.375	PVAENB430
5.750	5.250	.375	PVAENB431
6.000	**5.500**	**.375**	**PVAENB433**
6.250	5.750	.375	PVAENB435
6.500	6.000	.375	PVAENB437
6.750	6.250	.375	PVAENB438
7.000	**6.500**	**.375**	**PVAENB439**
7.250	6.750	.375	PVAENB440
7.500	7.000	.375	PVAENB441
7.750	7.250	.375	PVAENB442
8.000	**7.500**	**.375**	**PVAENB443**
8.500	8.000	.375	PVAENB445
9.000	8.500	.375	PVAENB446
9.500	9.000	.375	PVAENB447
10.000	**9.500**	**.375**	**PVAENB448**
10.500	10.000	.375	PVAENB449
11.000	10.500	.375	PVAENB450
11.500	11.000	.375	PVAENB451
12.000	**11.500**	**.375**	**PVAENB452**
12.500	12.000	.375	PVAENB453
13.000	12.500	.375	PVAENB454
13.500	13.000	.375	PVAENB455
14.000	13.500	.375	PVAENB456
14.500	14.000	.375	PVAENB457
15.000	14.500	.375	PVAENB458
15.500	15.000	.375	PVAENB459

The sizes listed in **bold** font are preferred sizes (more likely to be available for immediate shipment). Other dimensions and all intermediate sizes up to 102 inches (2,600mm) diameter can be supplied.

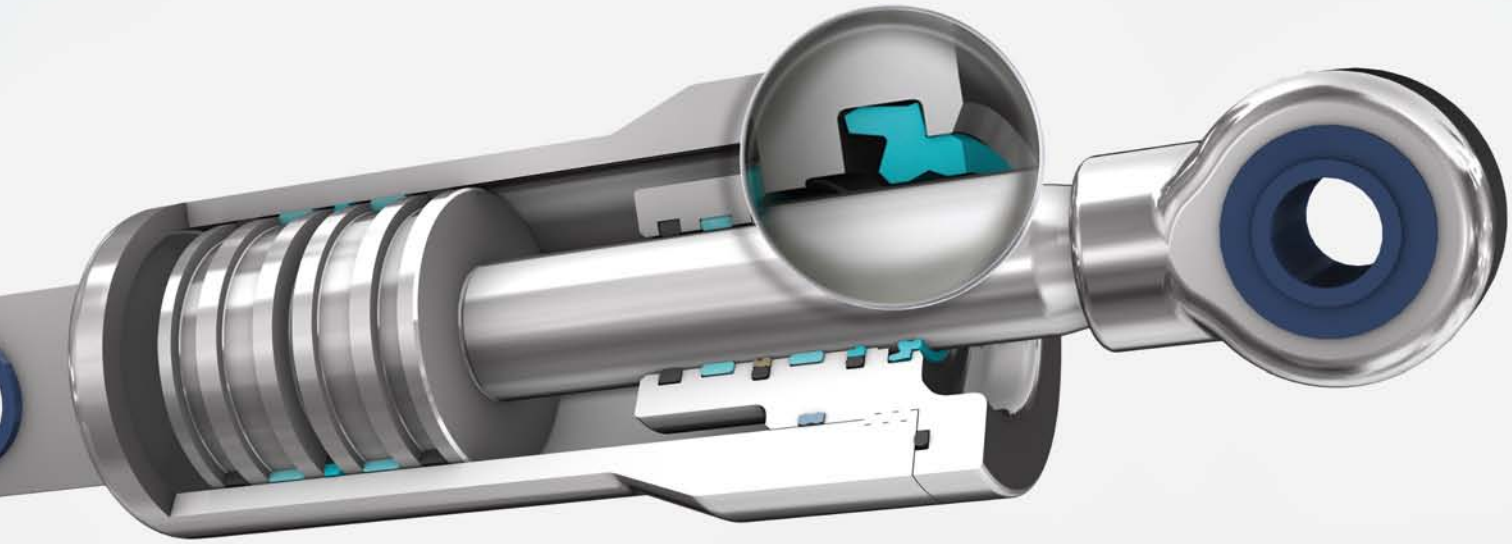

Contents

248	Choice of the Scraper Element
251	Zurcon® Scraper DA 22
257	Zurcon® Scraper DA 24
263	Zurcon® Scraper WKE
269	Scraper DA 17
275	Turcon® Excluder® 2
283	Turcon® Excluder® 5
291	Zurcon® Scraper WAE
297	Zurcon® Scraper SWP

Choice of the Scraper Element

Scrapers are installed in hydraulic cylinders to wipe any dirt, foreign particles, chips, moisture, etc. from the rod as it is retracted into the system. This prevents contamination of the hydraulic fluid, which would damage wear rings, seals and other components.

Single and double-acting scrapers are available, depending on the application and the sealing system. Single-acting scrapers are designed to keep out contamination from the outside; double-acting scrapers have the additional function of regulating the fluid film to avoid any external leakage.

In order to satisfy both the different technical and economic demands, there is a complete range of scrapers with optimized geometries made with high-quality materials.

Before selecting the scraper and the material, it is essential to know all the desired functional parameters. The table on the following pages allows a preliminary choice of the scraper type and material, according to the specific requirements of the application.

Further application information together with specific design and installation instructions for the particular scraper type and material can be found in this catalog.

NOTES ON ORDERING

All multi-element standard scrapers are supplied as a complete set. The supply includes the scraper and energizing element.

Designs of scrapers no longer contained in this catalog continue to be available. For new applications we recommend the use of the DIN/ISO series listed in this catalog.

The sizes contained in this catalog are generally available from stock and can be supplied on short notice. We reserve the right to modify our article structure without prior notice.

Please do not hesitate to contact your local Trelleborg Sealing Solutions sales office for further information on specific applications and special technical questions.

Table 89: Selection Criteria for Scrapers

Scraper		Application				Standard	Size Range	Groove Type	Action		Technical Data*		Recommended Scraper Material
		Field of Application									Temp. Range**	Velocity	
Type	Page		Light	Medium	Heavy	ISO/DIN	Inch	Inch	Single	Double	°F	Ft/s	
Zurcon® Scraper DA 22	251	ISO standard cylinder	•	•	•	6195 Type C	.188 - 10	Split <.709 Closed >.709		•	-30/+212	3.3	Zurcon® Z201
		Industrial hydraulic cylinders	•	•	•								
Zurcon® Scraper DA 24	257	Mobile hydraulics	•	•	•	-	.875-10	Closed		•	-30/+212	3.3	Zurcon® Z201
		Construction machinery	•	•	•								
		Agriculture machinery	•	•	•								
Zurcon® Scraper WKE	263	Agriculture machinery		•	•	-	.500 - 8	Open		•	-30/+212	3.3	Zurcon® Z201 + Metal
		Mobile hydraulic machinery		•	•								
Scraper DA 17	269	Industrial hydraulics	•	•		-	.375 - 20	Split <.709 Closed >.709		•	-22/+230	3.3	N9
		Machine tools	•	•									
		Presses	•	•									
Turcon® Excluder® 2	275	Industrial hydraulics	•	•	•	6195 Type D	.250 - 102	Split <1.181 Closed >1.181		•	-49/+392	50	Turcon® M12
		Machine Tools	•	•	•								
		Injection molding machines	•	•	•								
		Servo hydraulic cylinders	•	•	•								Turcon® T46
		Robotics	•	•	•								
Turcon® Excluder® 5	283	Heavy duty mobile and industrial hydraulics	•	•	•	6195 Type D	.750 - 102	Split <1.181 Closed >1.181		•	-49/+392	50	Turcon® M12
		Presses	•	•	•								Turcon® T46
		Steel mills	•	•	•		.750 - 86				-49/+230	6.5	Zurcon® Z54

* The data above are maximum values and cannot be used at the same time.
** Temperature range depends on choice of elastomer material and media.

Scraper		Application				Standard	Size Range	Groove Type	Ac-tion		Technical Data*		Recom-mended Scraper Mate-rial
		Field of Application									Temp. Range**	Velo-city	
Type	Page		Light	Medium	Heavy	ISO/DIN	Inch	Inch	Single	Double	°F	Ft/s	
Zurcon® Scraper WAE	291	Agriculture machinery	•	•		-	.315 - 8	Split <.515 Closed >.515	•		-30/+212	3.3	Zurcon® Z201
		Mobile hydraulic machinery	•	•									
Zurcon® Scraper SWP	297	Construction machinery		•	•	-	.315-8	Open	•		-30/+212	3.3	Zurcon® Z201 + Metal
		Link pin seals		•	•								

* The data above are maximum values and cannot be used at the same time.
** Temperature range depends on choice of elastomer material and media.

Double-Acting

Material:
Zurcon® Polyurethane

Zurcon® Scraper DA 22

Description

The DA 22 is a double-acting polyurethane scraper for closed groove installation. Significant improvements are achieved in profile geometry and material used if compared with conventional elastomeric scrapers.

The scraper lip is designed so that it effectively removes dirt while leaving only the oil film which is required for correct operation. The radial squeeze is sufficient to remove particles, dust and water.

The sealing lip, which faces inward, assumes a sealing function even under low pressure. The static seal is achieved by a tight radial fit between the scraper body and the groove.

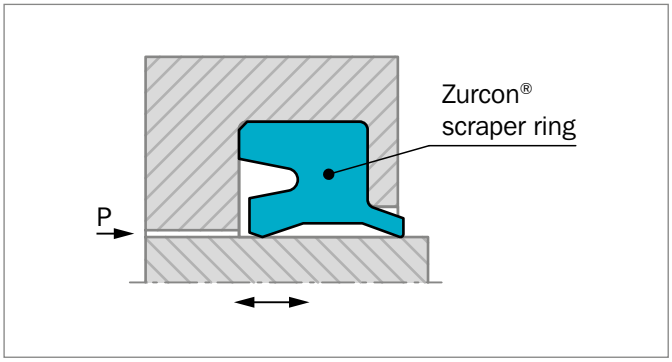

Figure 97: Scraper DA 22

ADVANTAGES

- Good scraping effect
- Wear resistant, long service life
- Retaining residual oil film
- Standard elements for standardized installation grooves

APPLICATION EXAMPLES

Due to the outstanding wiping capacities, the DA22 scraper is recommended wherever there are dusty and humid conditions, especially for the following applications:

- ISO standard cylinders
- Hydraulic industrial cylinders
- Agriculture machinery

TECHNICAL DATA

Operating conditions

Pressure Scraper Side:	Atmospheric pressure
Seal Side:	Pressures up to 290 psi (2 MPa) A relief port must be provided with higher pressures.
Velocity:	Up to 3.3 ft/s (1 m/s)
Temperature:	-30 °F to +212 °F (-35 °C to +100 °C)
Media:	Mineral oils and greases
Groove Type:	Closed

IMPORTANT NOTE

The above data are maximum values and cannot be used at the same time. e.g. the maximum operating speed depends on material type, pressure, temperature and gap value. Temperature range also dependent on medium.

MATERIALS

Standard application:

Zurcon® Polyurethane:	92 Shore A
Material Code:	Z201
Color:	Turquoise

Installation Recommendation (Inch Series)

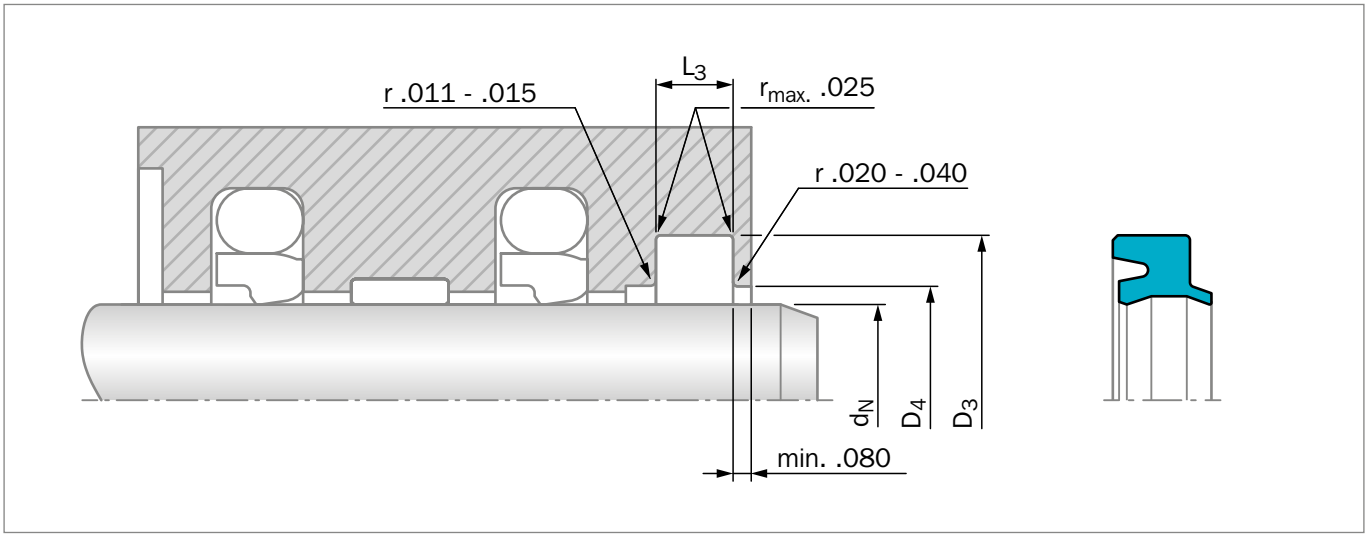

Figure 98: Installation drawing

Table 90: Installation recommendation

TSS Series No.	Rod Diameter d_N f8/h9	Groove Diameter	Relief Diameter	Groove Width	Radius
	Standard Application	D_3 H9	D_4 H11	L_3 +.008	r_{max}
WDE1	.250 - .812	d_N +.302	d_N +.120	.203	.025
WDE2	.813 - 2.499	d_N +.365	d_N +.135	.218	.025
WDE3	2.500 - 9.999	d_N +.495	d_N +.195	.281	.025

ORDERING EXAMPLE

Zurcon® Scraper DA 22

Rod Diameter:	d_N = 2.000 inches
TSS Part No.:	WDE202000
Material Code:	Z201

TSS Article No. WDE2 02000 - Z201

TSS Series No.
Rod Diameter x 1000
Quality Index (Standard)
Material Code

Table 91: Installation dimensions / TSS Part No.

Rod Diameter	Groove Diameter	Groove Width	Bore Diameter	TSS Part No.
d_N f8/h9	D_3 H9	L_3 +.008	D_4 h11	
.500	**.802**	**.203**	**.620**	**WDE100500**
.625	**.927**	**.203**	**.745**	**WDE100625**
.750	**1.052**	**.203**	**.870**	**WDE100750**
.875	1.240	.218	1.010	WDE200875
1.000	**1.365**	**.218**	**1.135**	**WDE201000**
1.125	1.490	.218	1.260	WDE201125
1.250	**1.615**	**.218**	**1.385**	**WDE201250**
1.375	1.740	.218	1.510	WDE201375
1.500	**1.865**	**.218**	**1.635**	**WDE201500**
1.625	1.990	.218	1.760	WDE201625
1.750	**2.115**	**.218**	**1.885**	**WDE201750**
1.875	2.240	.218	2.010	WDE201875
2.000	**2.365**	**.218**	**2.135**	**WDE202000**
2.125	2.490	.218	2.260	WDE202125
2.250	**2.745**	**.281**	**2.445**	**WDE302250**
2.375	2.870	.281	2.570	WDE302375
2.500	**2.995**	**.281**	**2.695**	**WDE302500**
2.750	**3.245**	**.281**	**2.945**	**WDE302750**
3.000	**3.495**	**.281**	**3.195**	**WDE303000**
3.250	3.745	.281	3.445	WDE303250
3.500	**3.995**	**.281**	**3.695**	**WDE303500**
3.750	4.245	.281	3.945	WDE303750
4.000	**4.495**	**.281**	**4.195**	**WDE304000**
4.250	4.745	.281	4.445	WDE304250
4.500	**4.995**	**.281**	**4.695**	**WDE304500**
4.750	5.245	.281	4.945	WDE304750
5.000	**5.495**	**.281**	**5.195**	**WDE305000**
5.250	5.745	.281	5.445	WDE305250
5.500	**5.995**	**.281**	**5.695**	**WDE305500**
5.750	6.245	.281	5.945	WDE305750
6.000	**6.495**	**.281**	**6.195**	**WDE306000**
6.500	6.995	.281	6.695	WDE306500
7.000	7.495	.281	7.195	WDE307000
7.500	7.995	.281	7.695	WDE307500
8.000	8.495	.281	8.195	WDE308000
8.500	8.995	.281	8.695	WDE308500

The sizes listed in **bold** font are preferred sizes (more likely to be available for immediate shipment).
Up to .7 inches (18mm) diameter we recommend a split groove.
Other dimensions and all intermediate sizes up to 20 inches (508mm) diameter can be supplied.

Double-Acting

Material:
Zurcon® Polyurethane

Zurcon® Scraper DA 24

Description

The DA 24 is a double-acting scraper made of polyurethane. It is ideal for severe operating conditions and heavy attack of dirt.

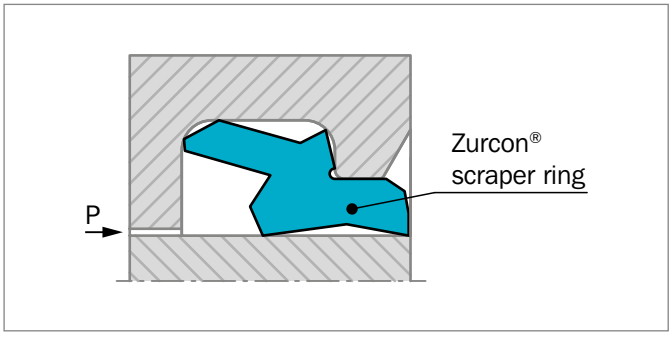

Figure 99: Scraper DA 24

The special design of the inward-facing sealing lip contributes to an optimum contact pressure resulting in a very high scraper effect of the residual oil film.

The outward-facing scraper lip leans against the housing. This ensures an optimum sealing force and prevents the penetration of dirt and water across the groove bottom. Also in heavily contaminated environments and high piston rod offset, the scraping effect remains stable. The polyurethane material ensures a high service life, even under demanding conditions, and ensures against installation damage.

ADVANTAGES

- Very good scraper effect of the outward lip
- Very good sealing effect of the inward lip
- Reliable at side steering of the piston rod
- Sturdy and wear-resistant
- Simple installation

APPLICATION EXAMPLES

The scraper DA 24 is especially suitable for applications in:

- Construction machinery
- Agriculture and forestry machinery
- Mobile hydraulics
- High attack of dirt
- Side steering of piston rod

Scraper DA 24 is used in connection with our rod seal system Zurcon® RU-9 and Zurcon® Buffer seal.

TECHNICAL DATA

Operating conditions:

Pressure:	Max. 725 psi (5 MPa)
Velocity:	Up to 3.3 ft/s (1 m/s) For applications at high strokes and higher speed, please contact your local Trelleborg Sealing Solutions sales office.
Temperature:	-30 °F to +212 °F (-35 °C to +100 °C)
Media:	Mineral oil-based hydraulic fluids

IMPORTANT NOTE

The above data are maximum values and cannot be used at the same time. e.g. the maximum operating speed depends on material type, pressure, temperature and gap value. Temperature range also dependent on medium.

MATERIAL

The scraper DA 24 consists of Zurcon® polyurethane material with high wearability, low deformation and high resistance to extrusion.

Standard application:

Zurcon® Polyurethane:	92 Shore A
Material Code:	Z201
Color:	Turquoise

Installation Recommendation (Inch Series)

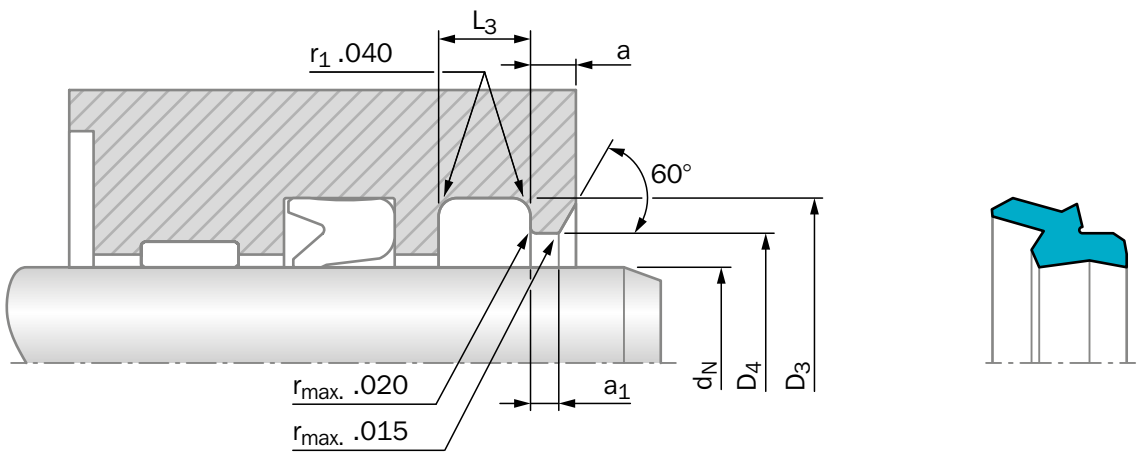

Figure 100: Installation drawing

Table 92: Installation recommendation

TSS Series No.	Rod Diameter	Groove Diameter	Relief Diameter	Groove Width	Step Width	Step Width
	d_N f8/h9	D_3 H9	D_4 H9	L_3 +.008	a min.	a_1 min.
WDG0	.875 - 1.499	d_N +.299	d_N +.150	.165	.118	.063
WDG1	1.500 - 2.749	d_N +.346	d_N +.173	.248	.125	.080
WDG2	2.750 - 4.500	d_N +.480	d_N +.236	.319	.160	.100

ORDERING EXAMPLE

Zurcon® Scraper DA 24

Rod diameter:	d_N = 2.500 inches
TSS Part No.:	WDG102500
Material Code:	Z201

TSS Article No. WDG1 02500 - Z201

- TSS Series No. — WDG1
- Rod Diameter x 1000 — 02500
- Quality Index (Standard) — -
- Material Code — Z201

NOTES:

1) Tolerances used are per ISO-286 ISO System Of Limits and Fits. The tolerances are converted from metric and rounded to the nearest three place decimal.

Table 93: Installation dimensions / TSS Part No.

Rod Diameter	Groove Diameter	Groove Width	Relief Diameter	Step Width	Step Width	TSS Part No.
d_N f8/h9	D_3 H9	L_3 +.008	D_4 H9	a min.	a_1 min.	
0.875	**1.174**	**.165**	**1.025**	**.118**	**.063**	**WDG000875**
1.000	**1.299**	**.165**	**1.150**	**.118**	**.063**	**WDG001000**
1.125	**1.424**	**.165**	**1.275**	**.118**	**.063**	**WDG001125**
1.250	**1.549**	**.165**	**1.400**	**.118**	**.063**	**WDG001250**
1.375	**1.674**	**.165**	**1.525**	**.118**	**.063**	**WDG001375**
1.500	**1.846**	**.248**	**1.673**	**.125**	**.080**	**WDG101500**
1.750	**2.096**	**.248**	**1.923**	**.125**	**.080**	**WDG101750**
2.000	**2.346**	**.248**	**2.060**	**.125**	**.080**	**WDG102000**
2.250	**2.596**	**.248**	**2.310**	**.125**	**.080**	**WDG102250**
2.500	**2.846**	**.248**	**2.560**	**.125**	**.080**	**WDG102500**
2.750	**3.230**	**.319**	**2.810**	**.125**	**.080**	**WDG202750**
3.000	**3.480**	**.319**	**3.080**	**.160**	**.100**	**WDG203000**
3.250	**3.730**	**.319**	**3.330**	**.160**	**.100**	**WDG203250**
3.500	**3.980**	**.319**	**3.580**	**.160**	**.100**	**WDG203500**
3.750	**4.230**	**.319**	**3.830**	**.160**	**.100**	**WDG203750**
4.000	**4.480**	**.319**	**4.080**	**.160**	**.100**	**WDG204000**
4.500	**4.980**	**.319**	**4.580**	**.160**	**.100**	**WDG204500**

The sizes listed in **bold** font are preferred sizes (more likely to be available for immediate shipment).
Other dimensions and all intermediate sizes up to 10 inches (250mm) diameter can be supplied.

Double-Acting

Metal-Encased Wiper

Material:
Zurcon® Polyurethane and Metal

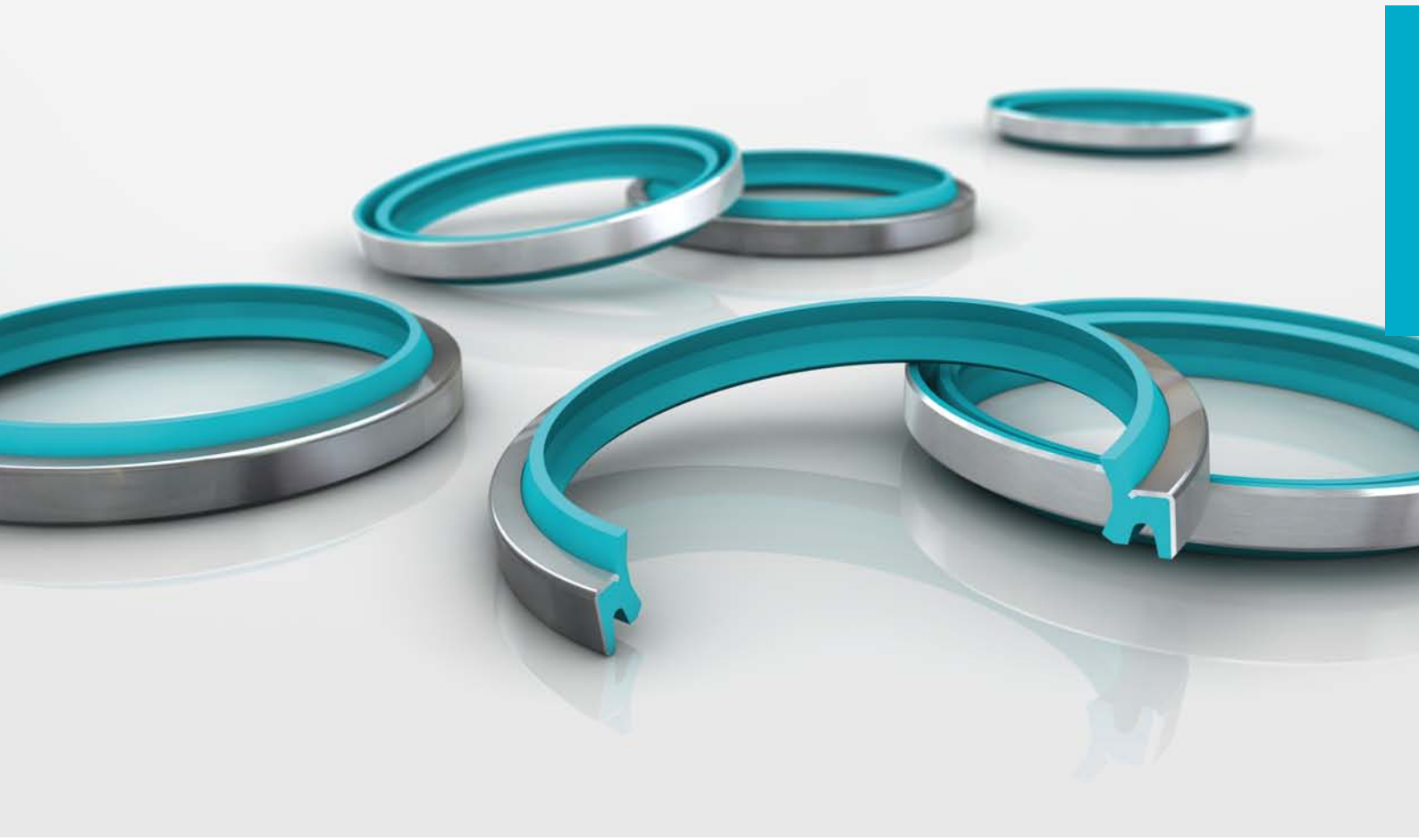

Zurcon® Scraper WKE

Description

The WKE is a polyurethane double-lipped wiper with integrated metal reinforcement for open groove assembly. These are typically used in heavy-duty and medium-duty tough applications that demand keeping the hydraulic system clean. The inner seal edge wipes the fluid film to maximize wiper life, yet prevent oil dripping in conjunction with the primary seal.

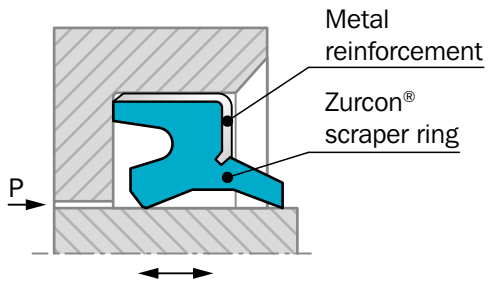

Figure 101: Scraper WKE

ADVANTAGES

- Space-saving construction
- High wear resistance / long life
- Simple, easy construction groove
- Firm fit in the groove due to metallic press fit
- Accurate fluid film control

APPLICATION EXAMPLES

Due to their outstanding wiping capacities WKE scrapers are recommended wherever there are dusty and humid conditions and especially for the following applications:

- Mobile hydraulic machinery
- Agriculture machinery
- Construction machinery
- Lift trucks

TECHNICAL DATA

Velocity:	Up to 3.3 ft/s (1 m/s)
Temperature:	-30 °F to +212 °F (-35 °C to +100 °C)
Media:	Mineral oil-based hydraulic fluids
Groove Type:	Open

IMPORTANT NOTE

The above data are maximum values and cannot be used at the same time. e.g. the maximum operating speed depends on material type, pressure, temperature and gap value. Temperature range also dependent on medium.

MATERIALS

Standard application

Zurcon® Polyurethane:	92 Shore A
Color:	Turquoise
Metal case:	Non-alloyed steel DIN 1624
Material set code:	Z201

Installation Recommendation (Inch Series)

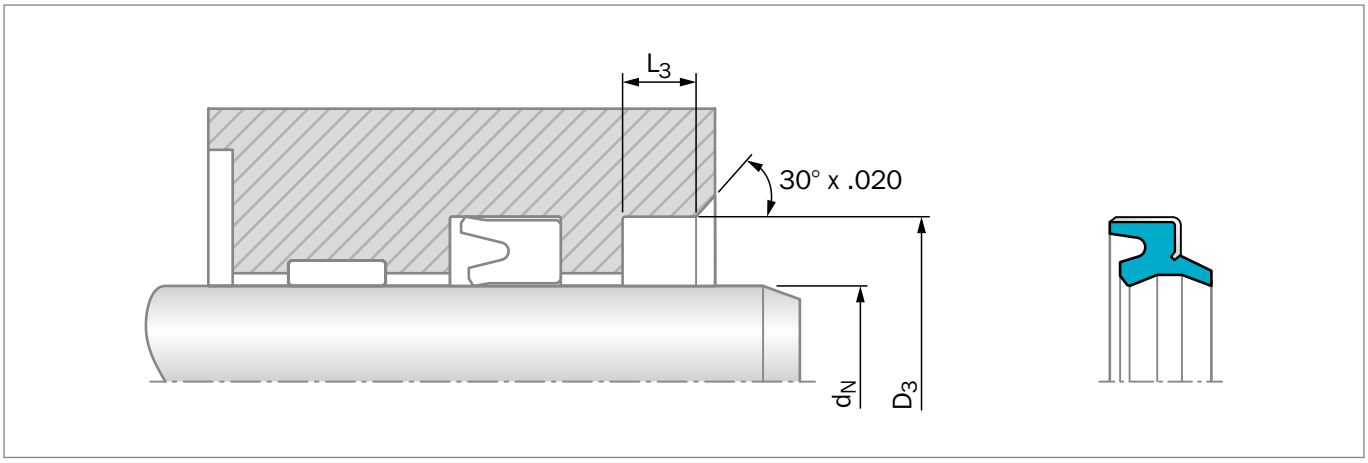

Figure 102: Installation drawing

Table 94: Installation recommendation

TSS Series	Rod Diameter d_N f8/h9		Groove Diameter	Groove Width
	Standard Application	Light Application	D_3 H9	L_3 +.015
WKE2	.500 - .1.000	1.001 - 2.000	d_N +.500	.250
WKE3	1.001 - 3.000	-	d_N +.500	.313
WKE4	3.001 - 4.750	4.751 - 5.250	d_N +.625	.313
WKE5	4.751 - 6.000	-	d_N +.625	.375
WKE6	-	4.000 - 7.000	d_N +.750	.375
WKE7	6.001 - 8.000	8.001 - 10.000	d_N +1.000	.500

ORDERING EXAMPLE

Zurcon® Scraper WKE

Rod diameter:	d_N = 2.500 inches
Groove diameter:	D_3 = 3.000 inches
TSS Part No.:	WKE302500
Material Set-Code:	Z201

TSS Article No. WKE3 02500 - Z201

TSS Series No.
Rod Diameter x 1000
Quality Index (Standard)
Material Code

NOTES:

1) Tolerances used are per ISO-286 ISO System Of Limits and Fits. The tolerances are converted from metric and rounded to the nearest three place decimal.

Table 95: Installation dimensions / TSS Part No.

Rod Diameter	Groove Diameter	Groove Width	TSS Part No.
d_N f8/h9	D_3 H9	L_3 +.015	
1.000	**1.500**	**.250**	**WKE201000**
1.125	1.625	.313	WKE301125
1.250	**1.750**	**.313**	**WKE301250**
1.375	1.875	.313	WKE301375
1.500	**2.000**	**.313**	**WKE301500**
1.625	2.125	.313	WKE301625
1.750	**2.250**	**.313**	**WKE301750**
1.875	2.375	.313	WKE301875
2.000	**2.500**	**.313**	**WKE302000**
2.125	2.625	.313	WKE302125
2.250	**2.750**	**.313**	**WKE302250**
2.375	2.875	.313	WKE302375
2.500	**3.000**	**.313**	**WKE302500**
2.625	3.125	.313	WKE302625
2.750	**3.250**	**.313**	**WKE302750**
2.875	3.375	.313	WKE302875
3.000	**3.500**	**.313**	**WKE303000**
3.125	3.750	.313	WKE403125
3.250	**3.875**	**.313**	**WKE403250**
3.375	4.000	.313	WKE403375
3.500	**4.125**	**.313**	**WKE403500**
3.750	**4.375**	**.313**	**WKE403750**
4.000	**4.625**	**.313**	**WKE404000**
4.250	**4.875**	**.313**	**WKE404250**
4.500	**5.125**	**.313**	**WKE404500**
4.750	5.375	.313	WKE404750
5.000	**5.625**	**.375**	**WKE505000**
5.250	5.875	.375	WKE505250
5.500	**6.125**	**.375**	**WKE505500**
5.750	6.375	.375	WKE505750
6.000	**6.625**	**.375**	**WKE506000**
6.500	7.500	.500	WKE706500
7.000	**8.000**	**.500**	**WKE707000**
7.500	8.500	.500	WKE707500
8.000	**9.000**	**.500**	**WKE708000**

The sizes listed in **bold** font are preferred sizes (more likely to be available for immediate shipment).
Other dimensions and all intermediate sizes up to 10 inches (250mm) diameter can be supplied.

Double-Acting

Material:
Elastomer

Scraper DA 17

Description

The DA 17 is a molded double-acting elastomer scraper. It has two geometrically different scraper lips.

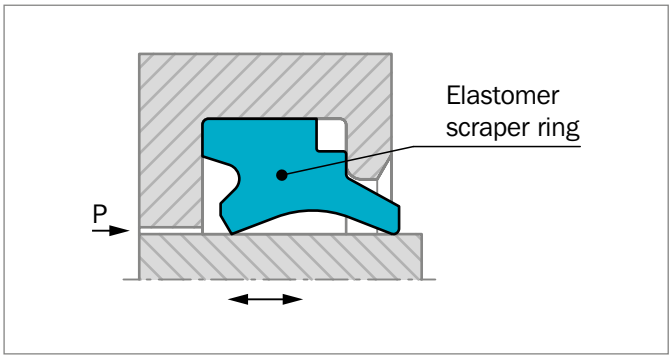

Figure 103: Scraper DA 17

The scraper is used for reciprocating piston rods and plunger pistons in hydraulic cylinders. It prevents the penetration of dirt into the system and holds back the residual oil film from the extending piston rod.

The scraper is preferably used in conjunction with our rod seals with a hydrodynamic back-pumping function.

ADVANTAGES - LOW FRICTION

- Good scraping effect both inwards and outwards
- Simple, small installation groove
- Compact design
- Easy installation and removal without tools

TECHNICAL DATA

Velocity:	Up to 3.3 ft/s (1 m/s)
Temperature:	-22 °F to +230 °F (-30 °C to +110 °C)
Media:	Mineral oil-based hydraulic fluids, flame retardant hydraulic fluids (HFA, HFB, HFC), water, air, etc.

IMPORTANT NOTE

The above data are maximum values and cannot be used at the same time. e.g. the maximum operating speed depends on material type, pressure, temperature and gap value. Temperature range also dependent on medium.

MATERIAL

Standard material: NBR, 90 Shore A

Installation Recommendation (Inch Series)

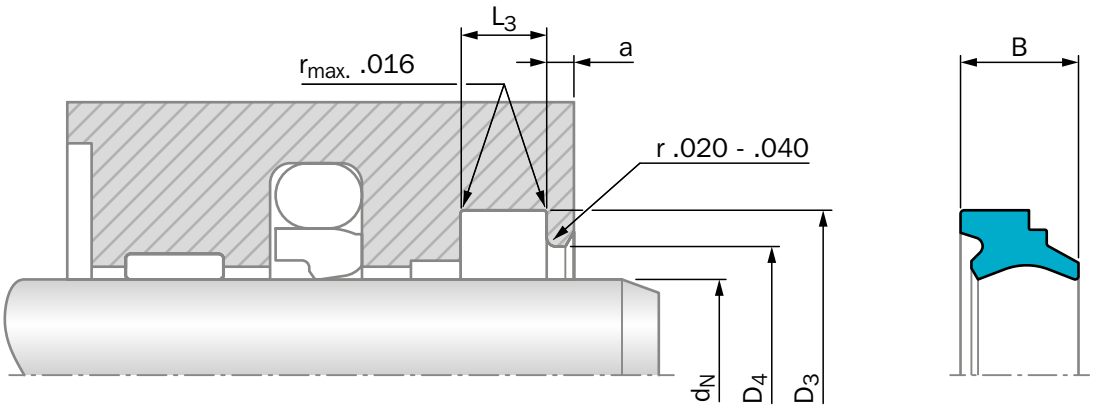

Figure 104: Installation drawing

ORDERING EXAMPLE

Scraper DA 17

Rod diameter:	d_N = 2.500 inches
TSS Part No.:	WD1700635 (from Table 96)
Material:	Standard material NBR 90 Shore A, Code N9

TSS Article No. **WD17 00635 - N9**

TSS Series No.
Metric Rod Diameter x 10
Quality Index (Standard)
Material Code

NOTES:

1) Tolerances used are per ISO-286 ISO System Of Limits and Fits. The tolerances are converted from metric and rounded to the nearest three place decimal.

Table 96: Installation dimensions / TSS Part No.

Rod Diameter	Groove Diameter	Groove Width	Relief Diameter	Step Width	TSS Part No.
d_N f8/h9	D_3 H9	L_3 +.015	D_4 H11	a min.	
.500	**.814**	**.236**	**.638**	**.079**	**WD1700127**
.750	**1.064**	**.236**	**.888**	**.079**	**WD1700191**
1.000	**1.314**	**.236**	**1.138**	**.079**	**WD1700254**
1.250	**1.564**	**.236**	**1.388**	**.079**	**WD1700318**
1.500	**1.814**	**.236**	**1.683**	**.079**	**WD1700381**
1.750	**2.064**	**.236**	**1.888**	**.079**	**WD1700445**
2.000	**2.314**	**.236**	**2.138**	**.079**	**WD1700508**
2.250	**2.564**	**.236**	**2.388**	**.079**	**WD1700572**
2.500	**2.814**	**.236**	**2.638**	**.079**	**WD1700635**
2.750	**3.064**	**.236**	**2.888**	**.079**	**WD1700699**
3.000	**3.314**	**.236**	**3.138**	**.079**	**WD1700762**
3.250	**3.564**	**.236**	**3.388**	**.079**	**WD1700826**
3.500	**3.814**	**.236**	**3.638**	**.079**	**WD1700889**
3.750	**4.064**	**.236**	**3.888**	**.079**	**WD1700953**
4.000	**4.472**	**.322**	**4.197**	**.118**	**WD1701016**
4.500	**4.972**	**.322**	**4.697**	**.118**	**WD1701143**
5.000	**5.472**	**.322**	**5.197**	**.118**	**WD1701270**
5.500	**5.972**	**.322**	**5.697**	**.118**	**WD1701397**
6.000	**6.472**	**.322**	**6.197**	**.118**	**WD1701524**

The sizes listed in **bold** font are preferred sizes (more likely to be available for immediate shipment).
Intermediate sizes above 5 inches (125mm) diameter can also be supplied in impact vulcanized form.
Other dimensions and all intermediate sizes up to 20 inches (500mm) diameter can be supplied.
Up to .7 inches (18mm) diameter we recommend a split groove.

Double-Acting

O-Ring-Energized Scraper

Material:
Turcon® , Zurcon® and Elastomer

Turcon® Excluder® 2

Description

The Turcon® Excluder® 2 is a double-acting scraper with two geometrically different scraper lips which are installed back-to-back. The Excluder® 2 is installed together with an elastic O-Ring in one groove. The scraper function is performed by the Excluder® 2. The O-Ring maintains the pressure of the scraper lips against the sliding surface and can compensate for any deflections of the piston rod.

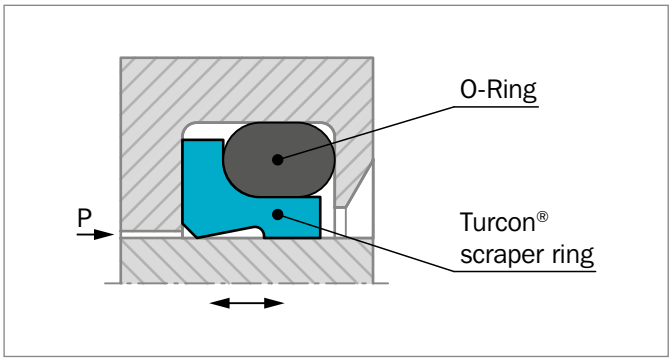

Figure 105: Turcon® Excluder® 2

The Excluder® 2 has two functions:

- Scrape contaminants from the retracting piston rod
- Hold back the residual oil film on the extending piston rod on the medium side

The Excluder® 2 is used with the Turcon® Stepseal® 2K, i.e. seals with a hydrodynamic back-pumping function.

ADVANTAGES

- Outstanding sliding properties
- Stick-slip-free
- Can compensate for deflections of the piston rod or plunger
- Space-saving construction
- Very good scraping effect against outside contaminants, even with firmly adhered dirt, etc.
- Very good scraping effect from the inside against the residual oil film adhering to the surface of the piston rod
- Very high resistance to hydraulic media
- Available for all diameters up to 102.000 inches (2,600mm) (Turcon®) and up to 86.000 inches (2,200mm) (Zurcon®)

TECHNICAL DATA

Velocity:	Up to 50 ft/s (15 m/s) for Turcon® materials Up to 6.5 ft/s (2 m/s) for Zurcon® materials
Temperature:	-49 °F to +392 °F (-45 °C to +200 °C) (depending on O-Ring material)
Media:	Mineral oil-based hydraulic fluids, flame retardant hydraulic fluids, environmentally safe hydraulic fluids (bio-oils), water, air and others, depending on the O-Ring material.

IMPORTANT NOTE

The above data are maximum values and cannot be used at the same time. e.g. the maximum operating speed depends on material type, pressure, temperature and gap value. Temperature range also dependent on medium.

MATERIALS

The following material combination has proven effective for most applications:

Excluder® :	Turcon® T46	
O-Ring:	NBR, 70 Shore A	N
Set Code:	T46N	

For other applications, other material combinations as listed in Table 97, may also be used.

DESIGN AND INSTALLATION INSTRUCTIONS

Excluder® 2 scrapers can be installed in split and closed grooves (For installation dimensions, see Table 98). Installation in closed grooves depends on the rod diameter, profile cross-section of the scraper and on the cord cross section of the corresponding O-Ring.

Table 97: Turcon® and Zurcon® Materials for Excluder® 2

Material, Applications, Properties	Code	O-Ring Material Shore A	Code	O-Ring Operating Temp.* °F	Mating Surface Material	Speed Ft/s max.
Turcon® M12 First material choice for seals in linear motion Overall improved properties For new and updated applications For all commonly used hydraulic fluids including fluids with low lubrication performance Lowest friction and best sliding properties Lowest wear on seals Improved absorption of abrasive contaminants Low wear or abrasion of counter surface Mineral fiber and additives fillers Color: Dark gray	M12	NBR-70	N	-22 to +212	Steel Steel hardened Steel chrome plated (rod) Steel plated (rod) Cast iron Stainless steel Titanium	50
		NBR-70 Low temp.	T	-49 to +176		
		FKM-70	V	+14 to +392		
Turcon® T46 Standard material for hydraulics High compressive strength Good sliding and wear properties BAM tested Bronze filled Color: Grayish to dark brown	T46	NBR-70	N	-22 to +212	Steel hardened Steel chrome plated Cast iron	50
		NBR-70 Low temp.	T	-49 to +176		
		FKM-70	V	+14 to +392		
Turcon® T40 For all lubricating and non-lubricating hydraulic fluids Hydraulic oils without zinc Water hydraulic, soft mating surfaces Surface texture not suitable for gases Carbon fiber-filled Color: Gray	T40	NBR-70	N	-22 to +212	Steel Steel chrome plated Cast iron Stainless steel Aluminum Bronze Alloys	50
		NBR-70 Low temp.	T	-49 to +176		
		FKM-70	V	+14 to +392		
		EPDM-70	E**	-49 to +293		
Turcon® T05 For all lubricating hydraulic fluids Hard mating surfaces Very good slide properties Low friction Color: Turquoise	T05	NBR-70	N	-22 to +212	Steel hardened Steel chrome plated	50
		NBR-70 Low temp.	T	-49 to +176		
		FKM-70	V	+14 to +392		

Table continues on next page

Material, Applications, Properties	Code	O-Ring Material Shore A	Code	O-Ring Operating Temp.* °F	Mating Surface Material	Speed Ft/s max.
Zurcon® Z54 For lubricating hydraulic fluids High abrasion resistance Color: Turquoise	Z54	NBR-70	N	-22 to +212	Steel Steel hardened Steel chrome plated Cast iron Stainless steel Ceramic coating Aluminium Bronze Alloys	6.5
		NBR-70 Low temp.	T	-49 to +176		

* The O-Ring operation temperature is only valid in mineral hydraulic oil.

** Material not suitable for mineral oils.

BAM: Tested by "Bundesanstalt Materialprüfung, Germany".

Highlighted materials are standard.

Installation Recommendation (Inch Series)

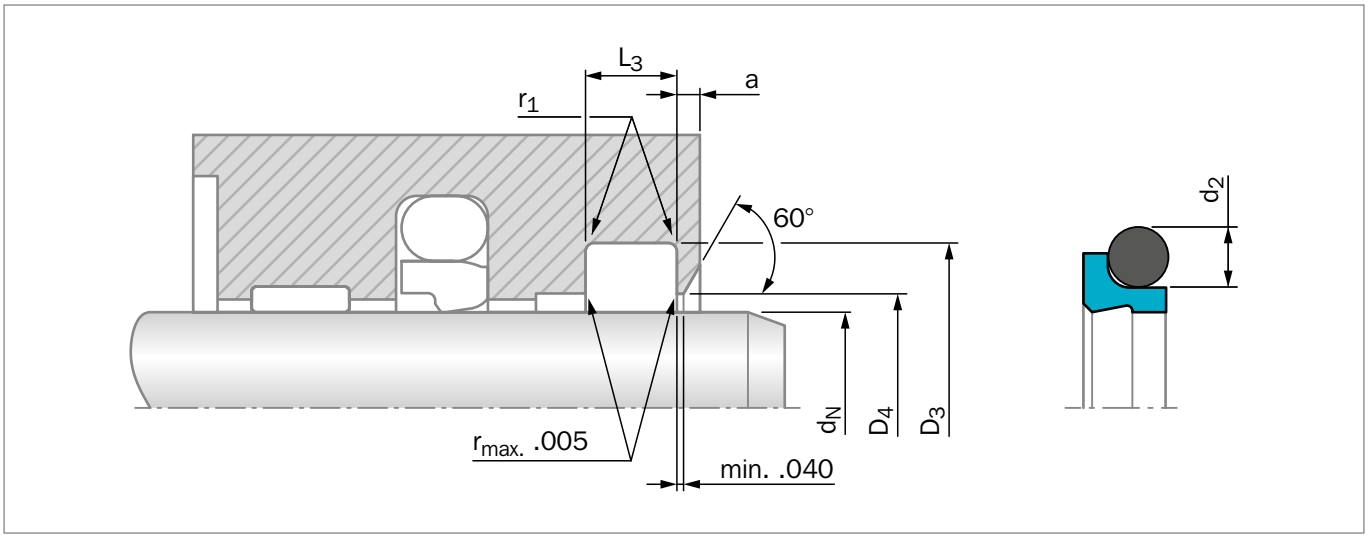

Figure 106: Installation drawing

Table 98: Installation recommendation

TSS Series No.	Rod Diameter d_N f8/h9			Groove Diameter	Relief Diameter	Groove Width	Radius	O-Ring Cross-Section
	Standard Application	Light Application	Heavy Duty Application	D_3 H9	D_4 H11	L_3 +.008	$r_{1\,max}$	d_2
WE20	.313 - .499	.500 - 5.125	-	d_N +.190	d_N +.060	.146	.015	.070
WE21	.500 - 2.499	2.500 - 9.625	.375 - .499	d_N +.270	d_N +.060	.196	.015	.103
WE22	2.500 - 9.999	10.000 - 15.750	1.000 - 2.499	d_N +.345	d_N +.060	.236	.015	.139
WE23	10.000 - 16.999	17.000 - 25.750	1.625 - 9.999	d_N +.480	d_N +.080	.332	.035	.210
WE24	17.000 - 19.999	20.000 - 25.750	4.375 - 16.999	d_N +.630	d_N +.080	.434	.035	.275

For diameters >15.7 inches (400mm) we recommend the use of Turcon® Excluder® 5.

ORDERING EXAMPLE

Turcon® Excluder® 2 with O-Ring, NBR

Rod diameter:	d_N = 2.500 inches
Series:	WE22 (from Table 98)
TSS Part No.:	WE2202500 (from Table 99)

TSS Article No. WE22 02500 - T46 N

- TSS Series No. — WE22
- Rod Diameter x 1000 — 02500
- Quality Index (Standard) — -
- Material Code (Scraper) — T46
- Material Code (O-Ring) — N

NOTES:

1) Tolerances used are per ISO-286 ISO System Of Limits and Fits. The tolerances are converted from metric and rounded to the nearest three place decimal.

Table 99: Installation dimensions / TSS Part No.

Rod Diameter	Groove Diameter	Groove Width	Relief Diameter	Step Width	TSS Part No.
d_N f8/h9	D_3 H9	L_3 +.008	D_4 H11	a min	
1.500	**1.770**	**.196**	**1.560**	**.079**	**WE2101500**
1.563	1.833	.196	1.623	.079	WE2101563
1.625	**1.895**	**.196**	**1.685**	**.079**	**WE2101625**
1.688	1.958	.196	1.748	.079	WE2101687
1.750	**2.020**	**.196**	**1.810**	**.079**	**WE2101750**
1.813	2.083	.196	1.873	.079	WE2101812
1.875	**2.145**	**.196**	**1.935**	**.079**	**WE2101875**
1.938	2.208	.196	1.998	.079	WE2101938
2.000	**2.270**	**.196**	**2.060**	**.079**	**WE2102000**
2.125	2.395	.196	2.185	.079	WE2102125
2.250	**2.520**	**.196**	**2.310**	**.079**	**WE2102250**
2.375	2.645	.196	2.435	.079	WE2102375
2.500	**2.845**	**.236**	**2.560**	**.118**	**WE2202500**
2.625	2.970	.236	2.685	.118	WE2202625
2.750	**3.095**	**.236**	**2.810**	**.118**	**WE2202750**
2.875	3.220	.236	2.935	.118	WE2202875
3.000	**3.345**	**.236**	**3.060**	**.118**	**WE2203000**
3.125	3.470	.236	3.185	.118	WE2203125
3.250	**3.595**	**.236**	**3.310**	**.118**	**WE2203250**
3.375	3.720	.236	3.435	.118	WE2203375
3.500	**3.845**	**.236**	**3.560**	**.118**	**WE2203500**
3.625	3.970	.236	3.685	.118	WE2203625
3.750	**4.095**	**.236**	**3.810**	**.118**	**WE2203750**
3.875	4.220	.236	3.935	.118	WE2203875
4.000	**4.345**	**.236**	**4.060**	**.118**	**WE2204000**
4.125	4.470	.236	4.185	.118	WE2204125
4.250	4.595	.236	4.310	.118	WE2204250
4.375	4.720	.236	4.435	.118	WE2204375
4.500	**4.845**	**.236**	**4.560**	**.118**	**WE2204500**
4.625	4.970	.236	4.685	.118	WE2204625
4.750	5.095	.236	4.810	.118	WE2204750
4.875	5.220	.236	4.935	.118	WE2204875
5.000	**5.345**	**.236**	**5.060**	**.118**	**WE2205000**
5.125	5.470	.236	5.185	.118	WE2205125
5.250	5.595	.236	5.310	.118	WE2205250
5.375	5.720	.236	5.435	.118	WE2205375
5.500	**5.845**	**.236**	**5.560**	**.118**	**WE2205500**
5.625	5.970	.236	5.685	.118	WE2205625
5.750	6.095	.236	5.810	.118	WE2205750
6.000	**6.345**	**.236**	**6.060**	**.118**	**WE2206000**

Rod Diameter	Groove Diameter	Groove Width	Relief Diameter	Step Width	TSS Part No.
d_N f8/h9	D_3 H9	L_3 +.008	D_4 H11	a min	
6.250	6.595	.236	6.310	.118	WE2206250
6.500	6.845	.236	6.560	.118	WE2206500
6.750	7.095	.236	6.810	.118	WE2206750
7.000	**7.345**	**.236**	**7.060**	**.118**	**WE2207000**
7.250	7.595	.236	7.310	.118	WE2207250
7.500	7.845	.236	7.560	.118	WE2207500
7.750	8.095	.236	7.810	.118	WE2207750
8.000	**8.345**	**.236**	**8.060**	**.150**	**WE2208000**
8.250	8.595	.236	8.310	.150	WE2208250
8.500	8.845	.236	8.560	.150	WE2208500
8.750	9.095	.236	8.810	.150	WE2208750
9.000	**9.345**	**.236**	**9.060**	**.150**	**WE2209000**
9.250	9.595	.236	9.310	.150	WE2209250
9.500	9.845	.236	9.560	.150	WE2209500
9.750	10.095	.236	9.810	.150	WE2209750
10.000	**10.480**	**.332**	**10.080**	**.150**	**WE2310000**
10.500	10.980	.332	10.580	.150	WE2310500
11.000	11.480	.332	11.080	.150	WE2311000
11.500	11.980	.332	11.580	.150	WE2311500
12.000	**12.480**	**.332**	**12.080**	**.150**	**WE2312000**
12.500	12.980	.332	12.580	.150	WE2312500
13.000	13.480	.332	13.080	.150	WE2313000
13.500	13.980	.332	13.580	.150	WE2313500
14.000	**14.480**	**.332**	**14.080**	**.150**	**WE2314000**
14.500	14.980	.332	14.580	.150	WE2314500
15.000	15.480	.332	15.080	.150	WE2315000
15.500	15.980	.332	15.580	.150	WE2315500
16.000	**16.480**	**.332**	**16.080**	**.150**	**WE2316000**
16.500	16.980	.332	16.580	.150	WE2316500
17.000	17.630	.434	17.080	.150	WE2417000
17.500	18.130	.434	17.580	.150	WE2417500
18.000	**18.630**	**.434**	**18.080**	**.150**	**WE2418000**
18.500	19.130	.434	18.580	.150	WE2418500
19.000	19.630	.434	19.080	.150	WE2419000
19.500	20.130	.434	19.580	.150	WE2419500
20.000	**20.630**	**.434**	**20.080**	**.150**	**WE2420000**

Other dimensions and all intermediate sizes up to 102 inches (2,600mm) diameter can be supplied.
The sizes listed in **bold** font are preferred sizes (more likely to be available for immediate shipment).

Double-Acting

O-Ring-Energized Scraper

Material:
Turcon® , Zurcon® and Elastomer

Turcon® Excluder® 5

Description

The Turcon® Excluder® 5 is a patented double-acting scraper with two geometrically different scraper lips which are installed back-to-back. The scraper is installed together with an O-Ring as the elastic energizing element in one groove. The scraper function is performed by the Excluder® 5. The O-Ring maintains the pressure of the scraper lips against the sliding surface and can compensate for deflections of the piston rod.

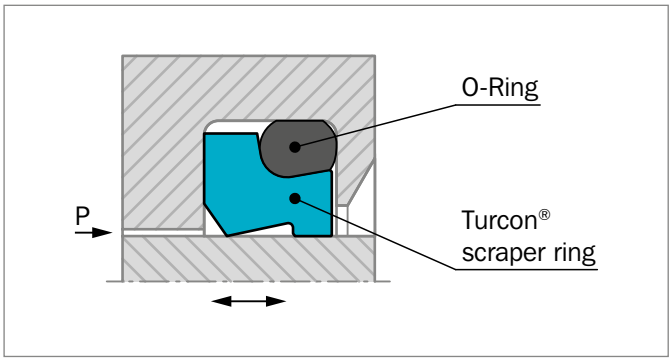

Figure 107: Turcon® Excluder® 5

The Excluder® 5 has two functions:

- Scrape contaminants from the retracting piston rod
- Hold back the residual oil film on the extending piston rod on the medium side

Excluder® 5 is preferably used with the Turcon® Stepseal® 2K, our rod seal with a hydrodynamic back-pumping function. In contrast to the Excluder® 2, the Excluder® 5 is used for heavy duty applications such as construction machinery, presses, etc.

ADVANTAGES

- Outstanding sliding properties
- Stick-slip-free (Turcon® material)
- Tough scraper for heavy-duty operation
- Can compensate for deflections of the piston rod or plunger
- Very good scraping effect even against firmly adhered dirt, etc.
- Very good scraping effect from the inside against the residual oil film adhering to the surface of the piston rod
- Very high resistance to hydraulic media
- Available for all diameters up to 102.000 inches (2,600mm) (Turcon®), up to 86.000 inches (2,200mm) (Zurcon®)

TECHNICAL DATA

Velocity:	50 ft/s (15 m/s) for Turcon® materials 6.5 ft/s (2 m/s) for Zurcon® materials
Temperature:	-49 °F to +392 °F (-45 °C to +200 °C) (Turcon®) -49 °F to +230 °F (-45 °C to +110 °C) (Zurcon®) (depending on O-Ring material)
Media:	Mineral oil-based hydraulic fluids, flame retardant hydraulic fluids, environmentally safe hydraulic fluids (bio-oils), water, air and others, depending on the scraper and O-Ring material.

IMPORTANT NOTE

The above data are maximum values and cannot be used at the same time. e.g. the maximum operating speed depends on material type, pressure, temperature and gap value. Temperature range also dependent on medium.

MATERIALS

The following material combination has proven effective for most applications:

Excluder® : Turcon® T46

O-Ring: NBR, 70 Shore A N

Set Code: T46N

For other applications, other material combinations as listed in Table 100 may also be used.

DESIGN AND INSTALLATION INSTRUCTIONS

Excluder® 5 scrapers can be installed in split and closed grooves (For installation dimensions, see Table 101).

Installation in closed grooves is depends on the rod diameter, profile cross-section of the scraper and on the cross section of the corresponding O-Ring.

Table 100: Turcon® and Zurcon® Materials for Excluder® 5

Material, Applications, Properties	Code	O-Ring Material Shore A	Code	O-Ring Operating Temp.* °F	Mating Surface Material	Speed Ft/s max.
Turcon® M12 First material choice for seals in linear motion Overall improved properties For new and updated applications For all commonly used hydraulic fluids including fluids with low lubrication performance Lowest friction and best sliding properties Lowest wear on seals Improved absorption of abrasive contaminants Low wear or abrasion of counter surface Mineral fiber and additives fillers Color: Dark gray	M12	NBR-70	N	-22 to +212	Steel Steel hardened Steel chrome plated (rod) Steel plated (rod) Cast iron Stainless steel Titanium	50
		NBR-70 Low temp.	T	-49 to +176		
		FKM-70	V	+14 to +392		
Turcon® T46 Standard material for hydraulics High compressive strength Good sliding and wear properties BAM tested Bronze-filled Color: Grayish to dark brown	T46	NBR-70	N	-22 to +212	Steel hardened Steel chrome plated	50
		NBR-70 Low temp.	T	-49 to +176		
		FKM-70	V	+14 to +392		
Turcon® T40 For all lubricating and non-lubricating hydraulic fluids Hydraulic oils without zinc Water hydraulic Soft mating surfaces Surface texture not suitable for gases Carbon fiber-filled Color: Gray	T40	NBR-70	N	-22 to +212	Steel Steel chrome plated Cast iron Stainless steel Aluminum Bronze Alloys	50
		NBR-70 Low temp.	T	-49 to +176		
		FKM-70	V	+14 to +392		
		EPDM-70	E**	-49 to +293		
Zurcon® Z54 For lubricating hydraulic fluids High abrasion resistance Color: Turquoise	Z54	NBR-70	N	-22 to +212	Steel Steel hardened Steel chrome plated Cast iron Stainless steel Ceramic coating Aluminium Bronze Alloys	6.5
		NBR-70 Low temp.	T	-49 to +176		

* The O-Ring operation temperature is only valid in mineral hydraulic oil.

** Material not suitable for mineral oils.

BAM: Tested by "Bundesanstalt Materialprüfung, Germany".

Highlighted materials are standard.

Installation Recommendation (Inch Series)

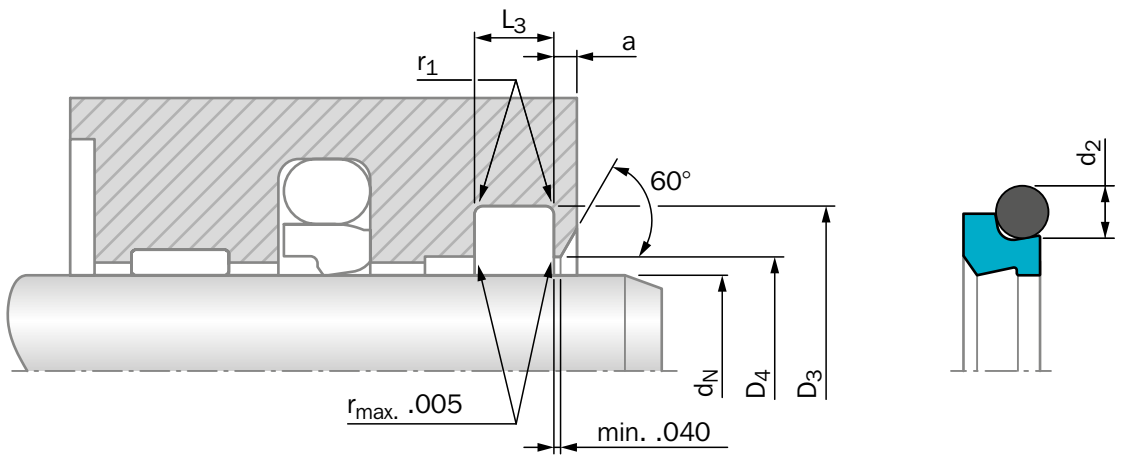

Figure 108: Installation drawing

Table 101: Installation recommendation

TSS Series No.	Rod Diameter d_N f8/h9			Groove Diameter	Relief Diameter	Groove Width	Radius	O-Ring Cross-Section
	Standard Application	Light Application	Heavy Duty Application	D_3 H9	D_4 H11	L_3 +.008	$r_{1\,max}$	d_2
WEE1	1.500 - 2.749	2.750 - 7.750	1.188 - 1.499	d_N +.346	d_N +.060	.248	.015	.103
WEE2	2.750 - 5.499	5.500 - 13.750	-	d_N +.480	d_N +.080	.319	.015	.139
WEE3	5.500 - 15.749	15.750 - 25.500	4.000 - 5.499	d_N +.630	d_N +.100	.374	.035	.210
WEE4	15.750 - 25.500	-	7.875 - 15.749	d_N +.945	d_N +.100	.551	.035	.275

ORDERING EXAMPLE

Turcon® Excluder® 5 with O-Ring in NBR

Rod diameter:	d_N = 2.500 inches
Series:	WEE1 (from Table 101)
TSS Part No.:	WEE102500 (from Table 102)

TSS Article No. WEE1 02500 - T46 N

- TSS Series No. — WEE1
- Rod Diameter x 1000 — 02500
- Quality Index (Standard) — -
- Material Code (Scraper) — T46
- Material Code (O-Ring) — N

Table 102: Installation dimensions / TSS Part No.

Rod Diameter	Groove Diameter	Groove Width	Relief Diameter	Step Width	TSS Part No.
d_N f8/h9	D_3 H9	L_3 +.008	D_4 H11	a min.	
1.500	**1.846**	**.248**	**1.560**	**.079**	**WEE101500**
1.563	1.909	.248	1.623	.079	WEE101563
1.625	**1.971**	**.248**	**1.685**	**.079**	**WEE101625**
1.688	2.034	.248	1.748	.079	WEE101687
1.750	**2.096**	**.248**	**1.810**	**.079**	**WEE101750**
1.813	2.159	.248	1.873	.079	WEE101812
1.875	**2.221**	**.248**	**1.935**	**.079**	**WEE101875**
1.938	2.284	.248	1.998	.079	WEE101938
2.000	**2.346**	**.248**	**2.060**	**.079**	**WEE102000**
2.125	2.471	.248	2.185	.079	WEE102125
2.250	**2.596**	**.248**	**2.310**	**.079**	**WEE102250**
2.375	2.721	.248	2.435	.079	WEE102375
2.500	**2.846**	**.248**	**2.560**	**.079**	**WEE102500**
2.625	2.971	.248	2.685	.079	WEE102625
2.750	**3.230**	**.319**	**2.810**	**.079**	**WEE202750**
2.875	3.355	.319	2.955	.118	WEE202875
3.000	**3.480**	**.319**	**3.080**	**.118**	**WEE203000**
3.125	3.605	.319	3.205	.118	WEE203125
3.250	**3.730**	**.319**	**3.330**	**.118**	**WEE203250**
3.375	3.855	.319	3.455	.118	WEE203375
3.500	**3.980**	**.319**	**3.580**	**.118**	**WEE203500**
3.625	4.105	.319	3.705	.118	WEE203625
3.750	**4.230**	**.319**	**3.830**	**.118**	**WEE203750**
3.875	4.355	.319	3.955	.118	WEE203875
4.000	**4.480**	**.319**	**4.080**	**.118**	**WEE204000**
4.125	4.605	.319	4.205	.118	WEE204125
4.250	**4.730**	**.319**	**4.330**	**.118**	**WEE204250**
4.375	4.855	.319	4.455	.118	WEE204375
4.500	**4.980**	**.319**	**4.580**	**.118**	**WEE204500**
4.625	5.105	.319	4.705	.118	WEE204625
4.750	**5.230**	**.319**	**4.830**	**.118**	**WEE204750**
4.875	5.355	.319	4.955	.118	WEE204875
5.000	**5.480**	**.319**	**5.080**	**.118**	**WEE205000**
5.125	5.605	.319	5.205	.118	WEE205125
5.250	5.730	.319	5.330	.118	WEE205250
5.375	5.855	.319	5.455	.118	WEE205375
5.500	**6.130**	**.374**	**5.580**	**.118**	**WEE305500**
5.625	6.255	.374	5.725	.118	WEE305625
5.750	6.380	.374	5.850	.118	WEE305750
6.000	**6.630**	**.374**	**6.100**	**.118**	**WEE306000**

Rod Diameter	Groove Diameter	Groove Width	Relief Diameter	Step Width	TSS Part No.
d_N f8/h9	D_3 H9	L_3 +.008	D_4 H11	a min.	
6.250	6.880	.374	6.350	.118	WEE306250
6.500	7.130	.374	6.600	.118	WEE306500
6.750	7.380	.374	6.850	.118	WEE306750
7.000	**7.630**	**.374**	**7.100**	**.118**	**WEE307000**
7.250	7.880	.374	7.350	.118	WEE307250
7.500	8.130	.374	7.600	.118	WEE307500
7.750	8.380	.374	7.850	.118	WEE307750
8.000	**8.630**	**.374**	**8.100**	**.150**	**WEE308000**
8.250	8.880	.374	8.350	.150	WEE308250
8.500	9.130	.374	8.600	.150	WEE308500
8.750	9.380	.374	8.850	.150	WEE308750
9.000	**9.630**	**.374**	**9.100**	**.150**	**WEE309000**
9.250	9.880	.374	9.350	.150	WEE309250
9.500	10.130	.374	9.600	.150	WEE309500
9.750	10.380	.374	9.850	.150	WEE309750
10.000	**10.630**	**.374**	**10.100**	**.150**	**WEE310000**
10.500	11.130	.374	10.600	.150	WEE310500
11.000	11.630	.374	11.100	.150	WEE311000
11.500	12.130	.374	11.600	.150	WEE311500
12.000	**12.630**	**.374**	**12.100**	**.150**	**WEE312000**
12.500	13.130	.374	12.600	.150	WEE312500
13.000	13.630	.374	13.100	.150	WEE313000
13.500	14.130	.374	13.600	.150	WEE313500
14.000	**14.630**	**.374**	**14.100**	**.150**	**WEE314000**
14.500	15.130	.374	14.600	.150	WEE314500
15.000	15.630	.374	15.100	.150	WEE315000
15.500	16.130	.374	15.600	.150	WEE315500
16.000	**16.945**	**.551**	**16.100**	**.150**	**WEE416000**
16.500	17.445	.551	16.600	.150	WEE416500
17.000	17.945	.551	17.100	.150	WEE417000
17.500	18.445	.551	17.600	.150	WEE417500
18.000	**18.945**	**.551**	**18.100**	**.150**	**WEE418000**
18.500	19.445	.551	18.600	.150	WEE418500
19.000	19.945	.551	19.100	.150	WEE419000
19.500	20.445	.551	19.600	.150	WEE419500
20.000	**20.945**	**.551**	**20.100**	**.150**	**WEE420000**

The sizes listed in **bold** font are preferred sizes (more likely to be available for immediate shipment).
Other dimensions and all intermediate sizes up to 102 inches (2,600mm) diameter can be supplied.

Single-Acting

Material:
Zurcon® Polyurethane

Zurcon® Scraper WAE

Description

The WAE is a single-acting polyurethane scraper.

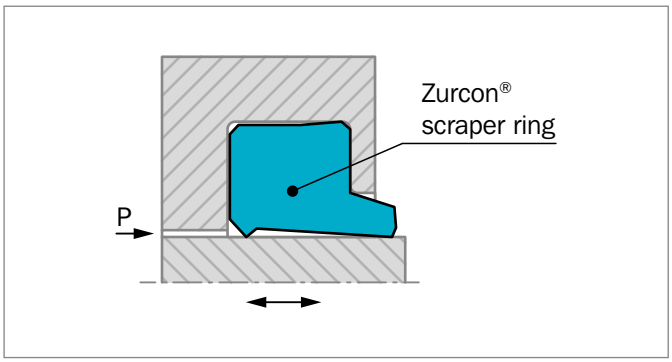

Figure 109: Scraper WAE

The special feature of this scraper is an additional support on the inner surface. It prevents tilting or twisting of the scraper in the groove. At the same time this support improves the firm seating in the groove, preventing the penetration of impurities via the back of the scraper. This represents a technical improvement compared to similar scraper types.

ADVANTAGES

- Simple groove design
- Very good scraping effect, wear-resistant
- No tilting or twisting in the groove
- Simple installation
- Flush fitting with the outer surface

TECHNICAL DATA

Velocity:	Up to 3.3 ft/s (1 m/s)
Temperature:	-30 °F to +212 °F (-35 °C to +100 °C)
Media:	Mineral oil-based hydraulic fluids

IMPORTANT NOTE

The above data are maximum values and cannot be used at the same time. e.g. the maximum operating speed depends on material type, pressure, temperature and gap value. Temperature range also dependent on medium.

MATERIAL

Standard application:

Zurcon® Polyurethane:	92 Shore A
Material Code:	Z201
Color:	Turquoise

Installation Recommendation (Inch Series)

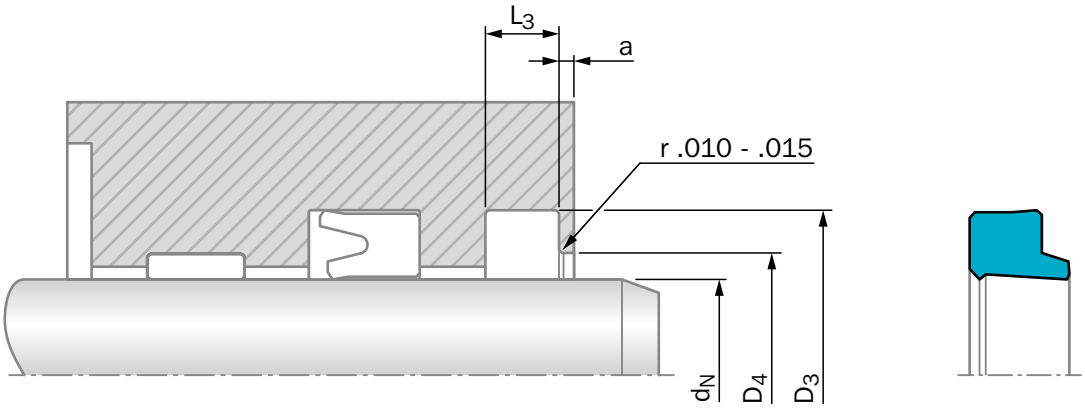

Figure 110: Installation drawing

Table 103: Installation recommendation

TSS Series No.	Rod Diameter	Groove Diameter	Relief Diameter	Groove Width
	d_N f8/h9	D_3 H9	D_4 H11	L_3 +.015
WAE1	.250 - .687	d_N +.250	d_N +.160	.125
WAE2	.688 - 1.999	d_N +.375	d_N +.240	.187
WAE3	2.000 - 4.375	d_N +.500	d_N +.325	.250
WAE4	3.625 - 4.375	d_N +.625	d_N +.405	.312
WAE5	4.376 - 8.000	d_N +.750	d_N +.485	.375
WAE6	7.000 - 10.000	d_N +1.000	d_N +.650	.500

ORDERING EXAMPLE

Zurcon® Scraper WAE

Rod diameter:	d_N = 2.500 inches
TSS Part No.:	WAE302500 (from Table 104)
Material:	Z201

TSS Article No. WAE3 02500 - Z201

TSS Series No.
Rod Diameter x 1000
Quality Index (Standard)
Material Code

NOTES:

1) Tolerances used are per ISO-286 ISO System Of Limits and Fits. The tolerances are converted from metric and rounded to the nearest three place decimal.
2) Grooves are ISO 6195 Type D to the nearest inch size and typical to industry standards

Table 104: Installation dimensions / TSS Part No.

Rod Diameter	Groove Diameter	Groove Width	Relief Diameter	Step Width	TSS Part No.
d_N f8/h9	D_3 H9	L_3 +.008	D_4 H11	a min.	
.500	.750	.125	.660	.079	WAE100500
.625	.875	.125	.785	.079	WAE100625
.750	1.125	.187	.995	.079	WAE200750
.875	1.250	.187	1.120	.079	WAE200875
1.000	**1.375**	**.187**	**1.245**	**.079**	**WAE201000**
1.125	1.500	.187	1.370	.079	WAE201125
1.250	**1.625**	**.187**	**1.497**	**.079**	**WAE201250**
1.375	1.750	.187	1.622	.079	WAE201375
1.500	**1.875**	**.187**	**1.747**	**.079**	**WAE201500**
1.625	2.000	.187	1.872	.079	WAE201625
1.750	**2.125**	**.187**	**1.997**	**.079**	**WAE201750**
1.875	2.250	.187	2.122	.079	WAE201875
2.000	**2.500**	**.250**	**2.327**	**.079**	**WAE302000**
2.125	2.625	.250	2.452	.079	WAE302125
2.250	**2.750**	**.250**	**2.577**	**.079**	**WAE302250**
2.375	2.875	.250	2.702	.079	WAE302375
2.500	**3.000**	**.250**	**2.827**	**.079**	**WAE302500**
2.625	3.125	.250	2.952	.079	WAE302625
2.750	**3.250**	**.250**	**3.077**	**.079**	**WAE302750**
2.875	3.375	.250	3.202	.079	WAE302875
3.000	**3.500**	**.250**	**3.327**	**.079**	**WAE303000**
3.250	**3.750**	**.250**	**3.577**	**.079**	**WAE303250**
3.500	**4.000**	**.250**	**3.827**	**.079**	**WAE303500**
3.750	**4.250**	**.250**	**4.077**	**.079**	**WAE303750**
3.875	4.375	.250	4.202	.079	WAE303875
4.000	**4.500**	**.250**	**4.327**	**.079**	**WAE304000**
4.250	4.750	.250	4.577	.079	WAE304250
4.500	**5.250**	**.375**	**4.993**	**.079**	**WAE504500**
4.750	5.500	.375	5.243	.079	WAE504750
5.000	**5.750**	**.375**	**5.493**	**.079**	**WAE505000**
5.250	6.000	.375	5.743	.079	WAE505250
5.500	**6.250**	**.375**	**5.993**	**.079**	**WAE505500**
5.750	6.500	.375	6.243	.079	WAE505750
6.000	**6.750**	**.375**	**6.493**	**.079**	**WAE506000**
6.250	7.000	.375	6.743	.079	WAE506250
6.500	7.250	.375	6.993	.079	WAE506500
6.750	7.500	.375	7.243	.079	WAE506750
7.000	**7.750**	**.375**	**7.493**	**.079**	**WAE507000**

Rod Diameter	Groove Diameter	Groove Width	Relief Diameter	Step Width	TSS Part No.
d_N f8/h9	D_3 H9	L_3 +.008	D_4 H11	a min.	
7.500	8.250	.375	7.993	.079	WAE507500
8.000	**8.750**	**.375**	**8.493**	**.079**	**WAE508000**

The sizes listed in **bold** font are preferred sizes (more likely to be available for immediate shipment).
Other dimensions and all intermediate sizes up to 10 inches (250mm) diameter can be supplied.
A split groove is required up to 0.600 inches (14mm) diameter.

Single-Acting

Metal-Encased Wiper

For Open Groove Assembly

Material:
Zurcon® Polyurethane and Metal

Zurcon® Scraper SWP

Description

The SWP is a polyurethane single-lipped scraper with integrated metal reinforcement for open groove assembly. It is typically used in severe applications where there is abrasion due to solid matter on the rod surface.

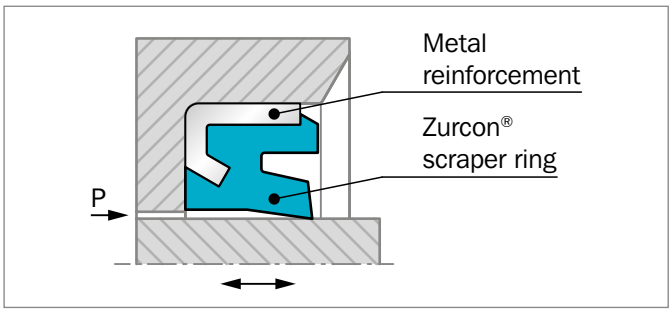

Figure 111: Scraper SWP

TECHNICAL DATA

Operating conditions

Velocity:	Up to 3.3 ft/s (1 m/s)
Temperature:	-30 °F to +212 °F (-35 °C to +100 °C)
Media:	Mineral oil based hydraulic fluids
Groove Type:	Open

IMPORTANT NOTE

The above data are maximum values and cannot be used at the same time, e.g. the maximum operating speed depends on material type, pressure, temperature and gap value. Temperature range also depends on media.

ADVANTAGES

- Space-saving construction
- Simple small installation groove
- Firm fit in the groove due to metallic press fit
- At regreasing of drag bearing, the scraper lip opens at low overpressure; old grease can escape
- High wear resistance / long life

APPLICATION EXAMPLES

Due to their outstanding wiping capacities SWP scrapers are recommended wherever there are dusty and humid conditions and especially for the following applications:

- Mobile hydraulic machinery
- Construction machinery
- Link pin seals
- Lift trucks
- Truck cargo cranes
- Agriculture machinery

MATERIALS

Standard application

Zurcon® Polyurethane:	92 Shore A
Color:	Turquoise
Metal case:	Non alloyed steel DIN 1624
Material set code:	Z2022

Installation Recommendation (Inch Series)

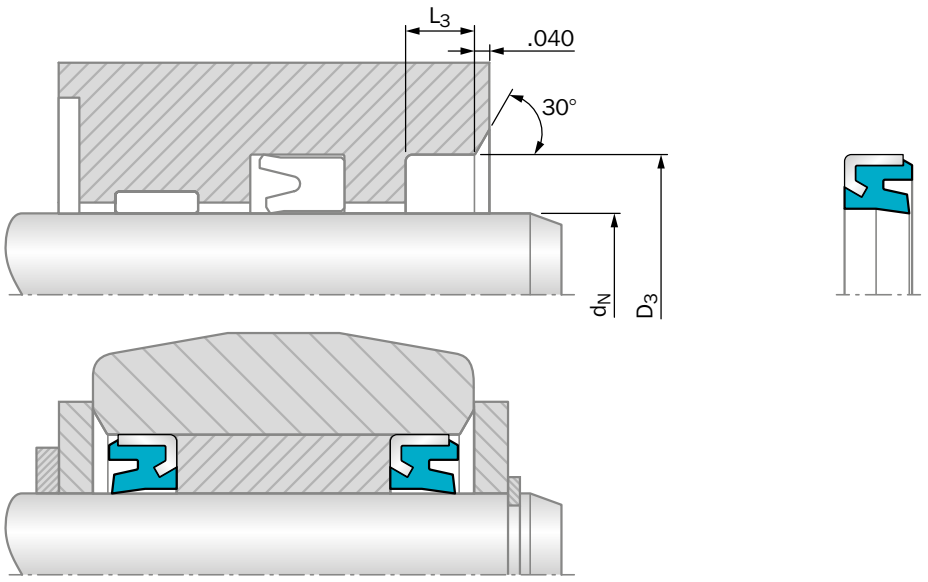

Link Pin Seal

Figure 112: Installation drawing

Table 105: Installation recommendation

TSS Series	Rod Diameter	Groove Diameter	Groove Width
	d_N f8/h9	D_3 H9	L_3 +.015
WSKCB	.500 - 2.000	d_N +.500	.250
WSKCC	.750 - 3.000	d_N +.500	.313
WSKDC	2.500 - 5.250	d_N +.625	.313
WSKDD	3.000 - 6.000	d_N +.625	.375
WSKED	4.000 - 7.000	d_N +.750	.375
WSKFF	5.000 - 10.000	d_N +1.000	.500

ORDERING EXAMPLE

Zurcon® Scraper SWP

Rod Diameter:	d_N = 2.500 inches
Groove Diameter:	D_3 = 3.000 inches
TSS Part No.:	WSKCC2500
Material Set-Code:	Z2022 (standard)

TSS Article No. WSKCC 2500 - Z2022

TSS Series No.
Rod Diameter x 1000
Quality Index (Standard)
Material Code

NOTES:

1) Tolerances used are per ISO-286 ISO System Of Limits and Fits. The tolerances are converted from metric and rounded to the nearest three place decimal.

Table 106: Installation dimensions / TSS Part No.

Rod Diameter	Groove Diameter	Groove Width	TSS Part No.
d_N f8/h9	D_3 H9	L3 +.015	
1.000	**1.500**	**.250**	**WSKCB1000**
1.125	1.625	.313	WSKCC1125
1.250	**1.750**	**.313**	**WSKCC1250**
1.375	1.875	.313	WSKCC1375
1.500	**2.000**	**.313**	**WSKCC1500**
1.625	2.125	.313	WSKCC1625
1.750	**2.250**	**.313**	**WSKCC1750**
1.875	2.375	.313	WSKCC1875
2.000	**2.500**	**.313**	**WSKCC2000**
2.250	**2.750**	**.313**	**WSKCC2250**
2.500	**3.000**	**.313**	**WSKCC2500**
2.750	**3.250**	**.313**	**WSKCC2750**
3.000	**3.500**	**.313**	**WSKCC3000**
3.250	**3.875**	**.313**	**WSKDC3250**
3.500	**4.125**	**.313**	**WSKDC3500**
3.750	**4.375**	**.313**	**WSKDC3750**
4.000	**4.625**	**.313**	**WSKDC4000**
4.250	**4.875**	**.313**	**WSKDC4250**
4.500	**5.125**	**.313**	**WSKDC4500**
4.750	5.375	.313	WSKDC4750
5.000	**5.625**	**.375**	**WSKDD5000**
5.250	5.875	.375	WSKDD5250
5.500	**6.125**	**.375**	**WSKDD5500**
6.000	**6.625**	**.375**	**WSKDD6000**
7.000	**8.000**	**.500**	**WSKFF7000**
8.000	**9.000**	**.500**	**WSKFF8000**

The sizes listed in **bold** font are preferred sizes (more likely to be available for immediate shipment).
Other dimensions and all intermediate sizes up to 10 inches (250mm) diameter can be supplied.

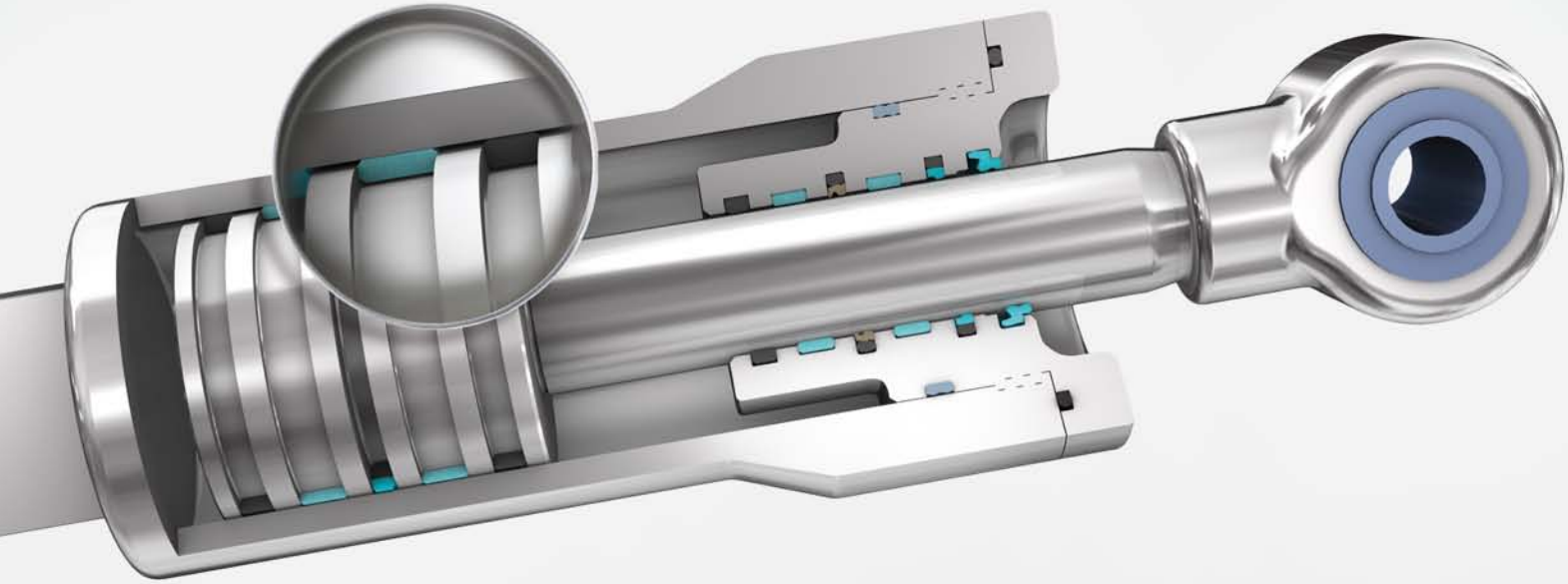

Contents

306	Choice of Slydring®
309	Design Instructions
311	Turcite® Slydring® for Piston and Rod
312	Zurcon® Slydring® for Piston and Rod
313	HiMod® Slydring® for Piston and Rod
315	Orkot® Slydring® for Piston and Rod
318	Installation and Part Numbers for Piston
326	Installation and Part Numbers for Rod

Choice of Slydring®

The function of Slydring® is to absorb the sideload forces which occur in the piston and/or rod of a hydraulic cylinder or other devices. At the same time they eliminate metallic contact between the sliding parts of the cylinder, e.g. piston and cylinder barrel or rod and cylinder head. Non-metallic guide rings offer major benefits compared with the traditional metallic guides:

- Cost efficient production
- High load bearing capacity
- Eliminates local stress concentrations
- Wear-resistant, long service lives
- Metal/plastic pairing eliminates fretting and seizure
- Favourable friction behaviour
- Damping of mechanical vibrations
- Good wiping effect, embedding of foreign particles possible
- Protection of the seal against “dieseling“
- Free choice of material of the metal components as guiding properties are no longer required
- Eliminates hydrodynamic pressure problems in the guide system
- Simple closed groove, easy installation
- Low service costs

MATERIALS

In view of the different specific demands made on piston and rod guides, various Slydring® materials are available:

- Turcite® materials are highly wear-resistant, low friction, specially modified materials for low to medium duty with limited radial forces
- HiMod® materials with friction-reducing fillers for medium to heavy duty radial forces
- Orkot® fabric composite materials for heavy duty and high radial forces

In order to choose the most suitable Slydring® , it is first necessary to know all the required functional parameters. Table 107 can be used to make an initial preselection of the Slydring® and the materials to meet the demands of the application.

Before the final choice of Slydring® and material is made, the details and information must be checked in the relevant data sheets of Slydring® materials.

In principle, piston Slydring® and rod Slydring® are interchangeable if the difference in size is taken into consideration, e.g. piston Slydring® , diameter 2.500 x .125 thick can be used as a rod Slydring® diameter 2.250 x .125 thick.

TOLERANCES

Depending on the material and dimensions of the Slydring® , the thickness tolerance is in the range from +0.000/-0.003.

Please do not hesitate to contact our Technical Department for further information on specific applications and special technical questions.

Table 107: Selection Criteria for Slydring®

Slydring®		Application					Installation	
		Field of Application						
Type	Page		Light	Medium	Heavy	Mating Surface	Size Range (Inch)	Recommended Slydring® Material
Turcite® / Zurcon® Slydring®	311	Mobile hydraulics	•			Steel Steel hardchromed Steel hardened Cast iron	Rings up to 100 inches diameter	Turcite® T47
		Standard cylinders	•	•				
		Machine tools	•	•				
		Valves	•	•		Mild steel Steel Stainless steel Aluminum		Turcite® T51
		Rotary manifolds	•	•				
		Gas equipment	•	•				
		Pneumatics	•					
		Wind Power	•	•		Mild steel Steel hardchromed Cast iron Stainless steel Aluminum		Turcite® M12
		Off-road vehicles	•	•				
		Injection molding machines	•	•				
		Automotive industry	•	•				
		Foodstuff industry	•	•		Steel Mild steel Steel hardchromed Stainless steel Aluminium bronze Ceramic coating	Rings up to 100 inches diameter	Zurcon® Z80 UHMWPE
		Water hydraulics	•	•				
		Dry application	•	•				
		Pneumatics	•	•				
HiMod® Slydring®	313	Mobile hydraulics	•	•	•	Steel Steel hardchromed Cast iron	Rings up to 36 inches diameter	HiMod® HM803 PA/Glass fiber
		Standard cylinders	•	•	•			
		Agricultural machinery	•	•	•			
		Injection molding machines	•	•	•			
		Mobile hydraulics	•	•		Steel Steel hardchromed Cast iron		HiMod® HM852 PA/Glass fiber + PTFE
		Standard cylinders	•	•				
		Agricultural machinery	•	•				
		Injection molding machines	•	•				
		Mobile hydraulics	•	•		Steel Steel hardchromed Cast iron		HiMod® HM861 POM/Glass fiber
		Standard cylinders	•	•				
		Agricultural machinery	•	•				
Orkot® Slydring®	315	Mobile hydraulics		•	•	Steel Steel hardchromed Cast iron	Rings up to 30 inches diameter	Orkot® C320
		Standard cylinders	•	•	•			
		Presses	•	•	•			
		Mobile hydraulics		•	•	Steel Steel hardchromed Cast iron		Orkot® C380
		Standard cylinders	•	•	•			
		Water hydraulics	•	•	•			
		Shipping and marine engineering	•	•	•			
		Presses	•	•	•			
		Mobile hydraulics		•	•	Steel Steel hardchromed Cast iron	Rings up to 12 inches diameter	Orkot® C932
		Standard cylinders	•	•	•			
		Presses	•	•	•			

FORMS OF SUPPLY

Two characteristics must be observed:

1. Design Type
Slydring® has a rectangular cross-section with rounded or chamfered edges, thus preventing edge forces from becoming too high in the corner radii of the grooves. Chamfers also facilitate installation. Slydring® is supplied with the gap necessary (dimension Z or Z_1) for their function. The ring ends are finished as standard with an angle cut. Depending on the material, Slydring® is supplied as split rings or as strip material. Strip material is available in rolls or precut to size as listed in Table 107.

Table 108: Forms of Supply for Slydring®

Material	Ring Diameter (Inches)	Cut Strip for Diameter (Inches)
Turcite® T47/T51	.500 to 99	1 - 96
Zurcon® Z80	.500 to 20	3 - 96
Orkot® C320	.750 to 60	12 - 80
Orkot® C380	.750 to 60	-
Orkot® C932	.750 to 60	-
HiMod® HM803	*	-
HiMod® HM852	.500 to 36	-
HiMod® HM861	.500 to 36	-

*See HiMod® Slydring® section

2. Type of Cut
Figure 113 shows the commonly used angle cut. Rings with other types of cut are available on request.

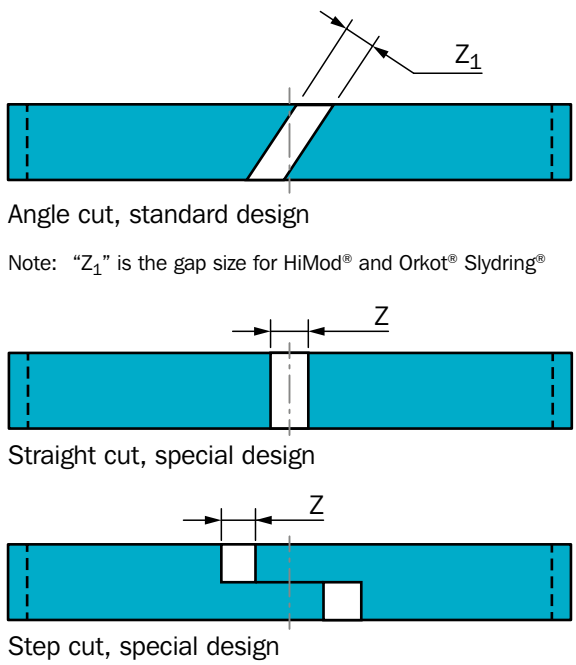

Figure 113: Type of cut

Slydring® has a tightly controlled thickness to maximize its load carrying capability and extend the life of the seals. A precision wall thickness tolerance of .002" is achieved on our standard product in this catalog. Our HiMod® Slydring® HM803 is available in either a precision wall tolerance of 0.002 inch (HiMod® Slydring® HP) or in a wide tolerance of 0.120 – 0.125 inches (HiMod® Slydring® HC).
Wall thicknesses and sizes not mentioned in this catalog are available. Contact you local Trelleborg Sealing Solutions sales office for further information.

Table 109: Radial Clearance

Bore Diameter	min.	max.
.200 - .799	.008	.012
.800 - 3.999	.010	.016
4.000 - 9.999	.012	.024
10.000 - 19.999	.016	.032
20.000 - 39.999	.020	.044
>40.000	.024	.048

Table 110: Surface Roughness

Parameter	Mating Surface µin		Groove Surface
	Turcite® Materials	Zurcon®, HiMod® and Orkot® Materials	
R_{max}	25 - 160	40 - 160	<630
R_z DIN	16 - 100	25 - 100	<400
R_a	2 - 16	4 - 16	<100

Slydring® also allows foreign particles to be wiped away rather than being squeezed between the metal components. The slot 'Z_1' allows fluid to pass across the ring thus preventing fluid pressure buildup which might cause extrusion of the guide ring. To ensure the ring cannot escape out of the groove it is recommended to observe the following radial gap sizes as maximum:

- .020 for .060 thickness
- .035 for .125 thickness

IMPORTANT NOTE

The above stated limits for pressure and speed are maximum values individually. Friction heat generated by the combination of pressure and speed may cause local heat buildup. Care should be taken not to apply high values for pressure and speed at the same time.

Design Instructions

SELECTION OF SLYDRING®

An initial choice can be made for various applications by checking the Selection Criteria for Slydring® in Turcite®, Zurcon®, HiMod® or Orkot®, see Table 107 and the pages 313 through 315.

The values for the load on the Slydring® are valid for a load distribution as illustrated in Figure 114. The flexibility of the materials ensures a relatively constant specific load, irrespective of the size of the radial forces F, as with increasing radial loading, the guide surface subjected to the load increases also.

The radial forces which occur can vary within wide ranges and cannot always be calculated exactly in advance. For such cases, a safety factor of at least 2 is recommended when calculating (see calculation example).

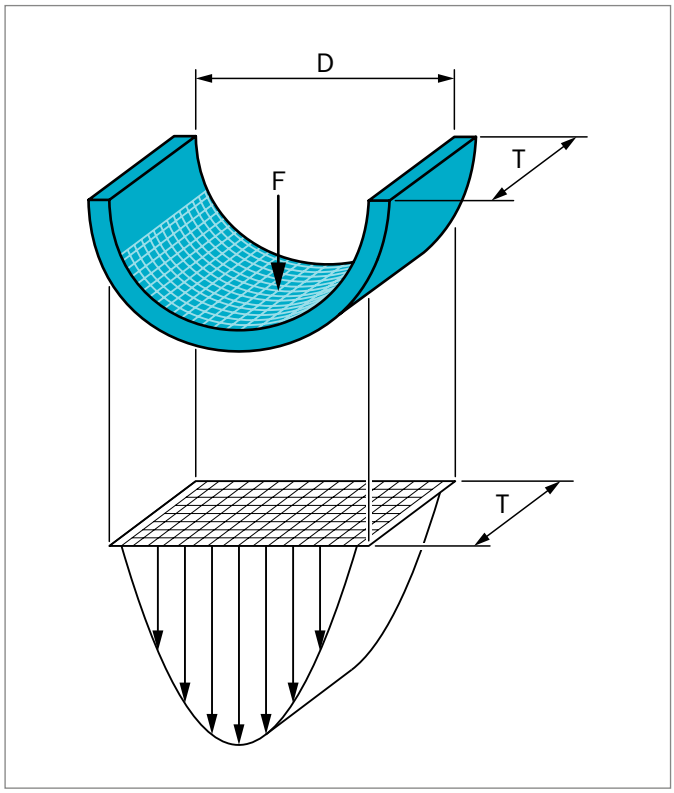

Figure 114: Load distribution

The large effective bearing area of non-metallic Slydring® gives low maximum contact pressure.

DIMENSIONING OF SLYDRING®

The radial bearing pressure and the resulting elastic deflection are important parameters in the design of the Slydring®.
The radial offset resulting from the dimensional tolerances, deflection and wear should always be less than the smallest gap to be sealed by the system.
On request, we are willing to carry out dimensioning calculations for specific applications.

A rough estimate of the number and width of Slydring® required can be calculated using the following formula:

$$\text{Slydring® width } T_{total} = \frac{F \times f}{d_N \times Pr}$$

where:

F	=	Maximum radial load [lb_f]
f	=	Safety factor
d_N	=	Rod diameter [inch]
Pr	=	Radial Slydring® pressure [lb_f/inch²]

Example:

d_N	=	2.500 inch
F	=	9,000 lb_f
T	=	105 °F
f	=	2

Slydring® material Orkot® C380
$Pr_{per.}$ = 14,500 lb_f/inch²

$$T_{total} = \frac{9{,}000 \times 2}{2.500 \times 14{,}500} = 0.497 \text{ inch}$$

From Table 114, a groove with a width of .510 inch is selected.

Selected:
Series GP2C with a Groove Width L_2 = .510 inch

When calculating the width of Slydring® it is recommended to use a safety factor f=2.

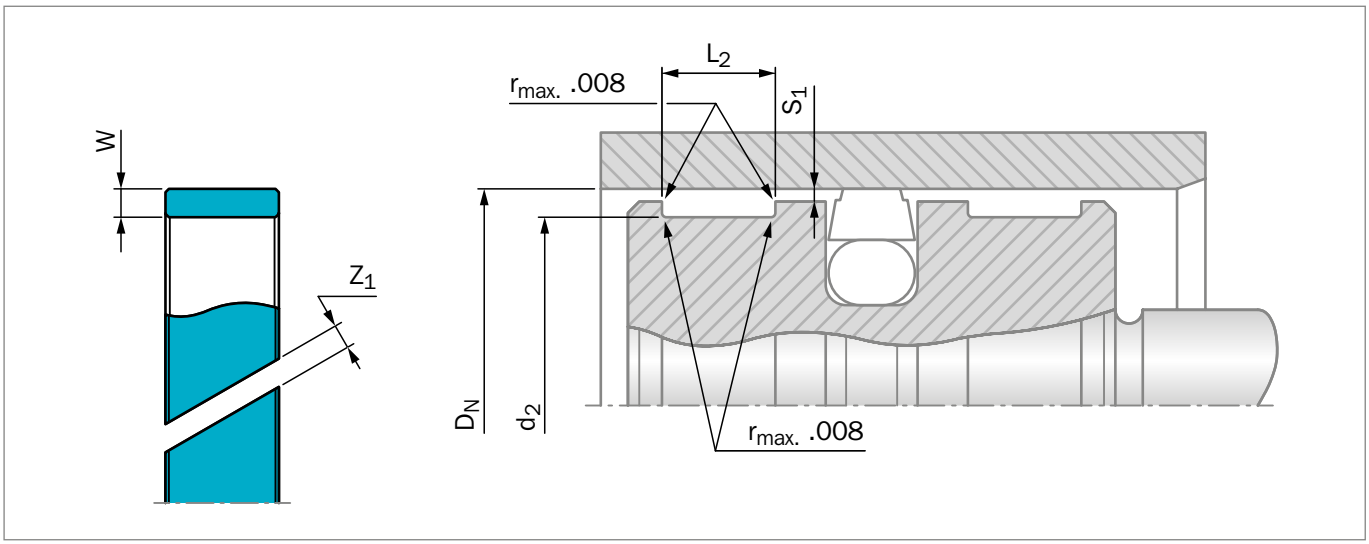

Figure 115: Piston guide

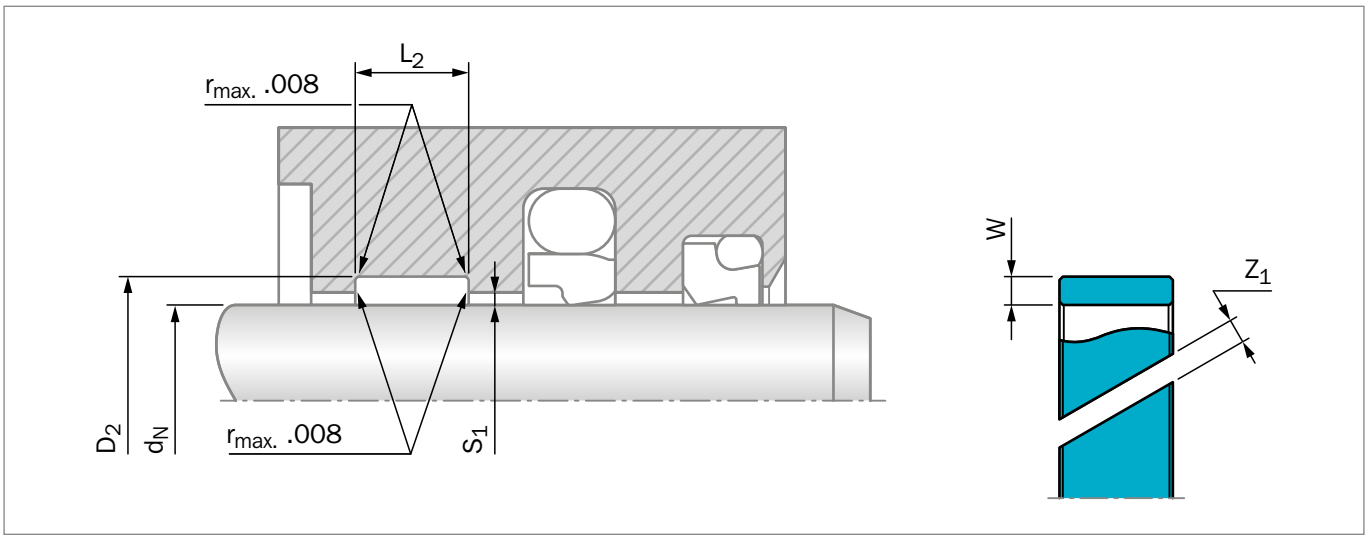

Figure 116: Rod guide

To improve the operational safety, particularly under high loads, the installation of a 3rd strip in material Turcite® M12 or T47 is recommended. It is installed on the oil side and serves, for example, as an internal scraper.

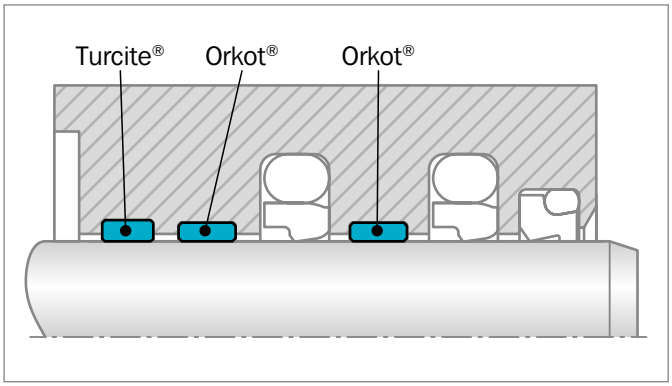

Figure 117: Rod guide for high loads

Turcite® Slydring® for Piston and Rod

DESCRIPTION

Turcite® Slydring® is used as piston and rod guides due to their outstanding friction behaviour, stick-slip free running and good resistance to high temperatures and chemicals.

DESIGN

Turcite® Slydring® is also available as cut-to-length strips or in bulk rolls. Please contact your local Trelleborg Sealing Solutions sales office for more information.

ADVANTAGES

- No stick-slip effect when starting for smooth operation even at very low speeds
- Minimum static and dynamic friction coefficient for low operating temperature and energy loss
- Suitable for non lubricating fluids depending on Turcite® material for optimum design flexibility
- High wear resistance ensures long service life
- Installation grooves according to ISO 10766
- Suitable for most hydraulic fluids in relation with the majority of modern hardware materials and surface finish depending on material selected
- Suitable for new environmentally safe hydraulic fluids
- The embedding of foreign particles is enhanced
- Good damping effect, absorbs vibrations

TECHNICAL DATA

The Turcite® Slydring® with angle cut is recommended for reciprocating movements

Velocity:	Up to 10.8 ft/s
Temperature:	-71 °F to +302 °F
Media:	Mineral Oil based Hydraulic fluids, barely flammable hydraulic fluids, environmentally safe hydraulic fluids (biological degradable oils), water, air and others. Depending on the Turcite® material compatibility.
Clearance:	The maximum permissible radial clearance smax is depending on the actual sealing system.
Radial Slydring® pressure Pr:	Max. 2,175 psi at 77 °F Max. 1,740 psi at 176 °F Max. 1,160 psi at 248 °F

MATERIALS

Standard Application:

- For hydraulic components with reciprocating movement in mineral oils or medium with good lubricating performance. Low friction, high resistance to wear, heat and chemicals:

  Turcite® T47 (bronze filled)
  Color: Turquiose
  Material code: T47

Special Application:

- For lubricated and poor lubricated moving components: Water hydraulics and soft metal surfaces:

  Turcite® T51 (carbon filled)
  Color: Brown
  Material code: T51

- For short stroke movements, non-lubricating fluids, water hydraulics, soft metal surfaces or pneumatic, applications requiring self-lubricating sealing materials:

  Turcite® T59 (carbon fiber filled)
  Color: Brown
  Material code: T51

With the Turcite® materials it must be taken into account that the permissible surface pressure decreases with increasing temperatures. The load bearing ability for dynamic applications in practice is dependent primarily on the operating temperature.
This should therefore generally not exceed 302 °F (150 °C).

Table 111: Installation in Closed Grooves Minimum Diameter for Turcite® Slydring

Axial Width	Ring Thickness	
	.063	.125
	Minimum Ring Diameter	
.375	.875	1.000
.500	.875	1.000
.625	1.125	1.250
.750	1.125	1.500
1.000	1.500	1.500
1.250	1.620	2.000
1.500	2.000	2.000
1.750	2.000	2.500
2.000	2.000	2.500
2.500	2.000	2.750

Zurcon® Slydring® for Piston and Rod

ZURCON® Z80

Z80 is a UHMW-PE (ultra high molecular weight polyethylene) material which meets the requirements in FDA 21 CFR 177:1520 and is therefore recommended for use in foodstuff applications. The material is also preferred for use in water hydraulics and pneumatics due to excellent friction and wear properties.

Color: White
Material code: Z80

ADVANTAGES

- Good lubrication and wear performance
- Self-lubricating
- Low friction value
- No water absorption
- In compliance with FDA
- Excellent resistance to chemicals
- High wear resistance.

TECHNICAL DATA

Velocity, reciprocating:	Max. 6.6 ft/s
Temperature:	-76 °F to +176 °F
Radial Slydring® pressure Pr:	Max. 3,625 psi at 77°F Max. 1,450 psi from 140 °F to 176 °F

■ HiMod® Slydring® for Piston and Rod

DESCRIPTION

HiMod® Slydring® is in hydraulic cylinders as piston and rod guides for medium to high load applications.

HiMod® HM803:	A special glass fiber-reinforced heat-stabilized polyamid
HiMod® HM852:	A special glass fiber-reinforced heat-stabilized polyamid with PTFE
HiMod® HM861:	A special glass fiber-reinforced polyacetal

DESIGN

HiMod® Slydring® are offered in two designs; a high precision HiMod® Slydring® HP and a value-focused HiMod® Slydring® HC.

HiMod® Slydring® HP
HiMod® Slydring® HP is a tight tolerance, machined product. The wall thickness tolerance is held to 0.002”. The standard gap is offered as a scarf cut.

HiMod® Slydring® HC
HiMod® Slydring® HC is a cost effective net molded wear ring. The wall thickness is 0.120” to 0.125” and is offered with a straight cut gap. It is only available in HiMod HM803 material.

MATERIALS

The HiMod® materials are special, modified thermoplastics known for their high stiffness and excellent friction and wear characteristics. Many different custom blended materials are available, but our standard grades are HiMod® HM803, HiMod® HM852, and HiMod® HM861.

HIMOD® HM803

Proprietary heat-stabilized polyamid material with special glass fibers for improved bearing characteristics and proven performance

Color: Dark Gray
Material code: HM803

ADVANTAGES

- Excellent price/performance ratio
- High compressive strength even at high temperatures
- High wear resistance
- Easy installation on pistons and glands (Use .060 wall for bores under 1.50 inches)
- Low Friction

TECHNICAL DATA

Velocity, reciprocating:	Max. 3.3 ft/s
Temperature:	-40° F to +275 °F
Radial Slydring® pressure Pr:	Max. 10,877 psi at 140 °F Max. 5,800 psi > 140 °F Water Absorption: <1%

Table 112: Installation in Closed Grooves Minimum Diameter for HiMod® Slydring

Axial Width	Ring Thickness	
	.063	.125
	Minimum Ring Diameter	
.375	.875	1.000
.500	.875	1.000
.625	1.125	1.250
.750	1.125	1.500
1.000	1.500	1.500
1.250	1.620	2.000
1.500	2.369	2.000
1.750	2.870	2.500
2.000	2.875	2.500
2.500	N/A	2.750

■ HiMod® Slydring® for Piston and Rod

HIMOD® HM852

Proprietary heat-stabilized polyamid material with special glass fibers plus PTFE lubricant for applications with marginal lubricity

Color: Dark Gray
Material code: HM852

ADVANTAGES

- Excellent price/performance ratio
- High compressive strength even at high temperatures
- High wear resistance
- Easy installation on pistons and glands (Use .060 wall for bores under 1.50 inches)
- Lower friction
- For operation under poor lubrication.

TECHNICAL DATA

Velocity, reciprocating:	Max. 3.3 ft/s
Temperature:	-40° F to +275 °F
Radial Slydring® pressure Pr:	Max. 10,877 psi at 140 °F Max. 5,800 psi >140 °F

HIMOD® HM861

HiMod® HM861 is a polyacetal (POM) based material with glass fibers.

Color: Dark Gray or Black
Material code: HM861

ADVANTAGES

- Favorable price/performance ratio
- High compressive strength
- Easy installation on pistons and glands (gland bore <1.50 inches)
- High wear resistance
- Water absorption 0.2%
- High stiffness

TECHNICAL DATA

Velocity, reciprocating:	Max. 2.65 ft/s
Temperature:	-40 °F to +230 °F
Radial Slydring® pressure Pr:	Max. 5,800 psi at 77 °F Max. 3,625 psi > 140 °F

■ Orkot® Slydring® for Piston and Rod

DESCRIPTION

Orkot® Slydring® of fabric-reinforced composite materials is used in hydraulic cylinders exposed to high loads that can occur, e.g. in mobile hydraulics and presses. The high compressive strength, good sliding behavior and the exceptional wear resistant properties ensure a long service life.

Slydring® of Orkot® fabric composite materials is produced as standard from tubular material. It is manufactured with an angle cut and already has the necessary gap Z_1.

For large diameters >12 inches rings can be cut from Orkot® C320, C380 strip material. This offers economical solutions for non-standard diameters or when quantities are limited.

MATERIALS

Orkot® C320
Orkot® C320 is a fabric composite material made of a thermosetting polymer, reinforced by a fine plastic mesh and lubricant additives impregnated throughout the material. It has a very high resistance to wear, good dry-running properties and dampens vibrations.

Color: dark gray
Material code: C320

Orkot® C380
Orkot® C380 is the standard material, this turquoise colored composite is a further development of the proven C320. It is most versatile; It is suitable for all commonly used hydraulic fluids such as mineral or synthetic oils, as well as water based fluids. It is an excellent electrical insulator and features enhanced sliding properties in various media.

Color: Turquoise
Material code: C380

Orkot® C932
Orkot® C932 is a composite of phenolic resin impregnated into a fine cotton fabric. The material stiffness is higher than C380 / C320. The use in water-based fluids is not recommended.

Color: yellow-brown
Material code: C932

INSTALLATION RECOMMENDATION

In order to protect the seal and guide system against ingress of foreign particles, we recommend the use of Turcite® Slydring® in combination with Orkot® Slydring® . The larger face area of these rings embeds the contaminant particles, when present in the system, and keeps them away from the actual guides and seals (Figure 118). Reducing the piston diameter at both ends allows the particles to become embedded on the face side.

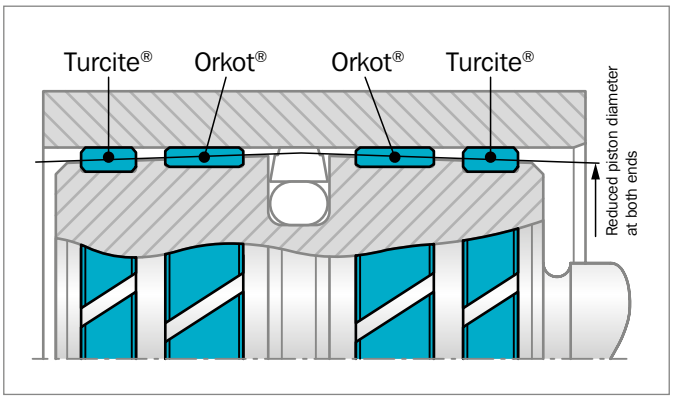

Figure 118: Arrangement of the Slydring® on the piston

TECHNICAL DATA

Velocity:	Up to 3.3 ft/s, with reciprocating movements
Temperature:	-105 °F to +250 °F
Pr under dynamic conditions	
C380, C320:	max. 14,500 psi at 77 °F
C932:	max. 7,250 psi >140 °F
Ultimate compressive strength	
C380, C320:	max. >43,500 psi
C932:	max. 37,709 psi

ADVANTAGES

- Dimensionally stable and vibration absorbing
- Even distribution of high radial forces
- Good sliding and dry running properties
- High wear resistance
- Good wiping effect
- Long service life.

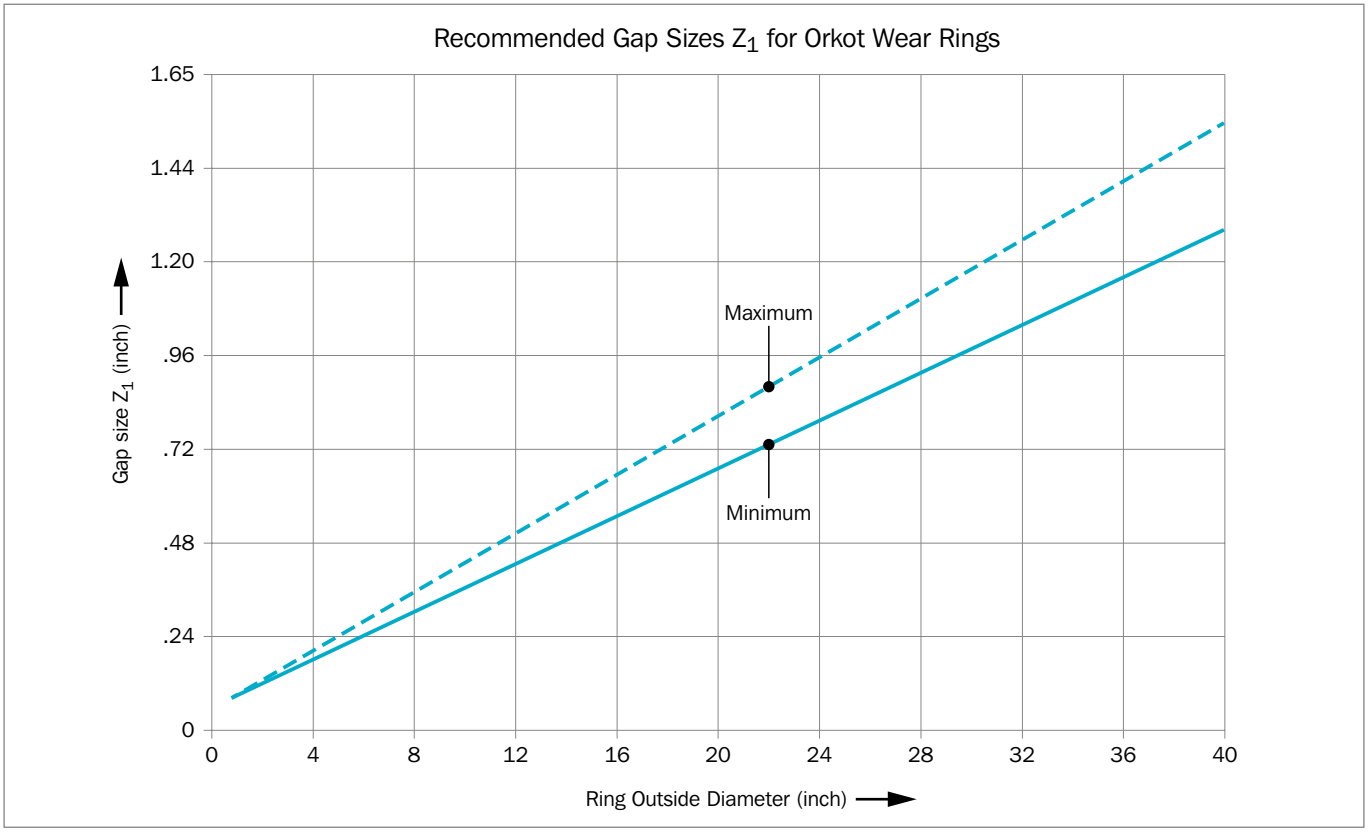

Figure 119: Recommended Gap Sizes Z_1 for Orkot Wear Rings - Piston

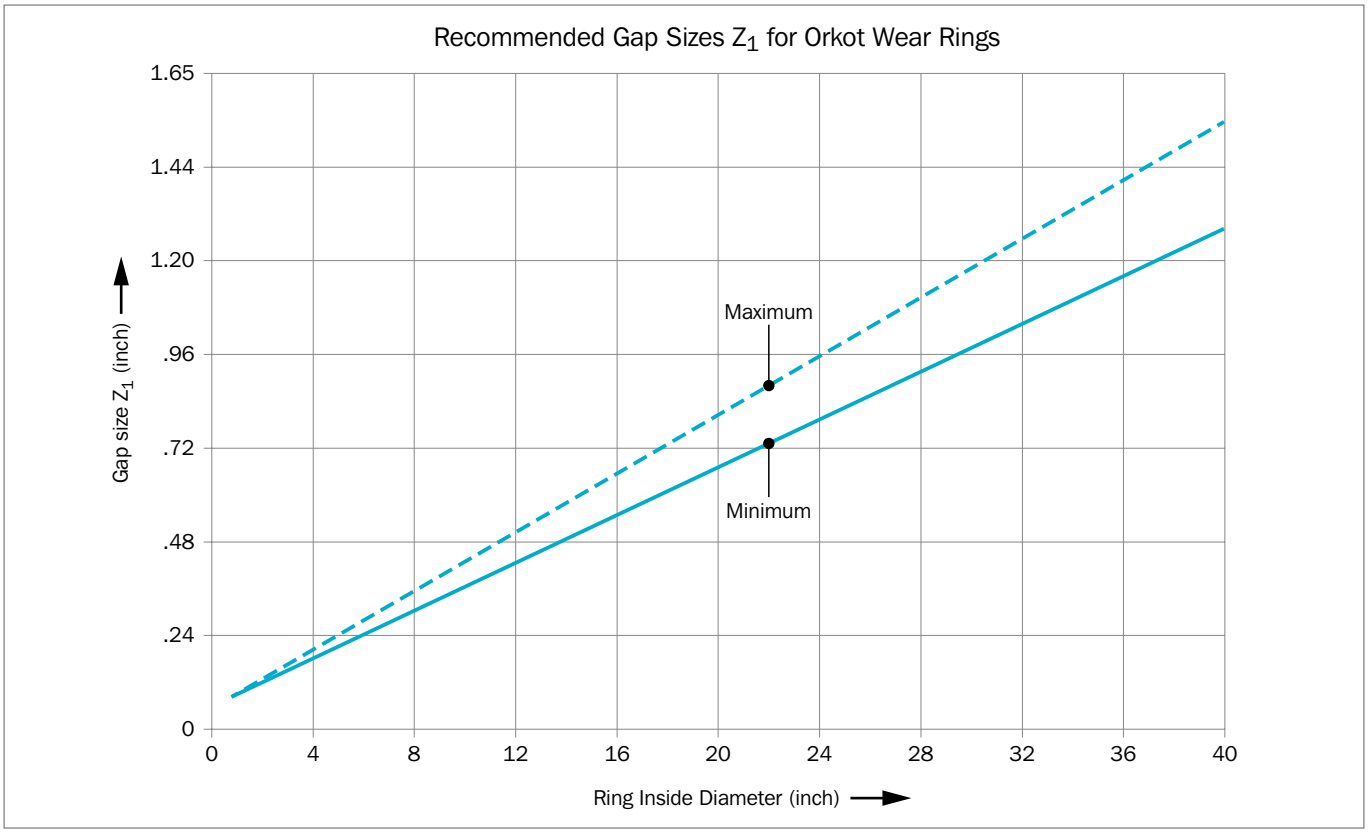

Figure 120: Recommended Gap Sizes Z_1 for Orkot Wear Rings - Rod

Table 113: Installation in Closed Grooves Minimum Diameter for Orkot® Slydring

Axial Width	Ring Thickness	
	.063	.125
	Minimum Ring Diameter	
.375	.500	.500
.500	.500	.500
.625	.750	.750
.750	1.000	1.000
1.000	1.000	1.000
1.250	1.750	1.750
1.500	1.750	1.750
1.750	2.000	2.000
2.000	2.000	2.000
2.500	3.000	3.000

Installation Recommendation and Part Numbers - Piston (Inch Series)

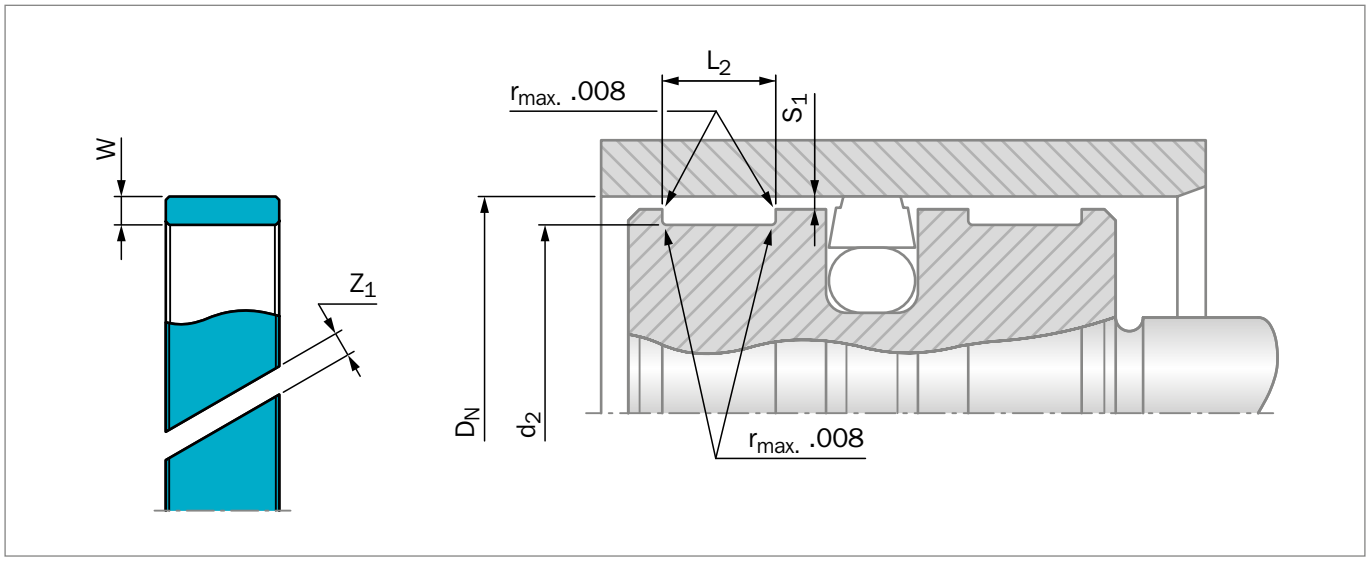

Figure 121: Installation drawing

Table 114: Installation recommendation

TSS Series No.	Bore Diameter	Groove Diameter	Groove Width	Thickness
	D_N H9	**d_2** h9	**L_2** +.010	**W** (max)
GP0B	1.000 - 4.000	D_N -.126	.385	.063
GP0C	1.000 - 4.000	D_N -.126	.510	.063
GP2B	1.000 - 4.000	D_N -.250	.385	.125
GP2C	**1.250 - 10.000**	**D_N -.250**	**.510**	**.125**
GP2D	1.500 - 10.000	D_N -.250	.635	.125
GP2E	**2.000 - 12.000**	**D_N -.250**	**.760**	**.125**
GP2F	**2.500 - 16.000**	**D_N -.250**	**1.010**	**.125**
GB2G	3.000 - 20.000	D_N -.250	1.260	.125
GP2H	**4.000 - 20.000**	**D_N -.250**	**1.510**	**.125**
GP2J	6.000 - 20.000	D_N -.250	1.760	.125
GP2K	**8.000 - 20.000**	**D_N -.250**	**2.010**	**.125**
GP2L	10.000 - 20.000	D_N -.250	2.510	.125

Notes:
(1) Tolerances used are per ISO-286 system of limits and fits.
(2) **Bold** Print indicates preferred series

ORDERING EXAMPLE

Slydring® for Bore diameter D_N = 3.250 inches Series GP2C from Table 114

Groove width:	.510 inches
Ring thickness:	.125 inches
Material:	Orkot® C380 Standard With angle cut
TSS Part No.:	GP2C03250 (from Table 115)

TSS Article No. **GP2C 03250 - C380**

- TSS Series No. — GP2C
- Bore Diameter x 1000 — 03250
- Quality Index (Standard) — -
- Material Code — C380

G	P,T	0 - 5	A - W	Bore diameter x 1000	-	C380
G=Slydring	P=Ring T=Strip	0=.063" 1=.094" 2=.125" 3=.250" 5=.157"	A =.250" (1/4) B =.375" (3/8) C =.500" (1/2) D =.625" (5/8) E =.750" (3/4) F =1.000" (1) G =1.250" (1 1/4) H =1.500" (1 1/2) J =1.750" (1 3/4) K =2.000" (2) L =2.500" (2 1/2) M=.125" (1/8) N =.188" (3/16) P =.313" (5/16) R =.438" (7/16) S =.563" (9/16) T =.688" (11/16) U =.813" (13/16) T =.688" (11/16) U =.813" (13/16) V =1.125" (1 1/8) W=.875" (7/8)	Equivalent to Bore (inch to 3 decimal places)	Quality Index (Standard)	T47 T51 M12 Z80 HM803 HM852 HM861 C320 C380 C932

Table 115: Slydring® for Pistons

Dimensions				TSS Part No.
Bore Diameter	Groove Diameter	Groove Width	Thickness	
D_N H9	d_2 h9	L_2 +.010	W	
1.250	**1.000**	**.510**	**.125**	**GP2C01250**
1.313	1.063	.510	.125	GP2C01313
1.375	**1.125**	**.510**	**.125**	**GP2C01375**
1.438	1.188	.510	.125	GP2C01438
1.500	**1.250**	**.510**	**.125**	**GP2C01500**
1.563	1.313	.510	.125	GP2C01563
1.625	**1.375**	**.510**	**.125**	**GP2C01625**
1.688	1.438	.510	.125	GP2C01688
1.750	**1.500**	**.510**	**.125**	**GP2C01750**
1.813	1.563	.510	.125	GP2C01813
1.875	**1.625**	**.510**	**.125**	**GP2C01875**
1.938	1.688	.510	.125	GP2C01938

Dimensions				TSS Part No.
Bore Diameter	Groove Diameter	Groove Width	Thickness	
D_N H9	d_2 h9	L_2 +.010	W	
2.000	**1.750**	**.510**	**.125**	**GP2C02000**
2.125	1.875	.510	.125	GP2C02125
2.250	**2.000**	**.510**	**.125**	**GP2C02250**
2.375	2.125	.510	.125	GP2C02375
2.500	**2.250**	**.510**	**.125**	**GP2C02500**
2.625	2.375	.510	.125	GP2C02625
2.750	**2.500**	**.510**	**.125**	**GP2C02750**
2.875	2.625	.510	.125	GP2C02875
3.000	**2.750**	**.510**	**.125**	**GP2C03000**
3.125	2.875	.510	.125	GP2C03125
3.250	**3.000**	**.510**	**.125**	**GP2C03250**
3.375	3.125	.510	.125	GP2C03375
3.500	**3.250**	**.510**	**.125**	**GP2C03500**
3.625	3.375	.510	.125	GP2C03625
3.750	**3.500**	**.510**	**.125**	**GP2C03750**
3.875	3.625	.510	.125	GP2C03875
4.000	**3.750**	**.510**	**.125**	**GP2C04000**
4.125	3.875	.510	.125	GP2C04125
4.250	**4.000**	**.510**	**.125**	**GP2C04250**
4.375	4.125	.510	.125	GP2C04375
4.500	**4.250**	**.510**	**.125**	**GP2C04500**
4.625	4.375	.510	.125	GP2C04625
4.750	4.500	.510	.125	GP2C04750
4.875	4.625	.510	.125	GP2C04875
5.000	**4.750**	**.510**	**.125**	**GP2C05000**
5.125	4.875	.510	.125	GP2C05125
5.250	5.000	.510	.125	GP2C05250
5.375	5.125	.510	.125	GP2C05375
5.500	**5.250**	**.510**	**.125**	**GP2C05500**
5.625	5.375	.510	.125	GP2C05625
5.750	5.500	.510	.125	GP2C05750
5.875	5.625	.510	.125	GP2C05875
6.000	**5.750**	**.510**	**.125**	**GP2C06000**
6.250	6.000	.510	.125	GP2C06250
6.500	6.250	.510	.125	GP2C06500
6.750	6.500	.510	.125	GP2C06750
7.000	**6.750**	**.510**	**.125**	**GP2C07000**
7.250	7.000	.510	.125	GP2C07250
7.500	7.250	.510	.125	GP2C07500
7.750	7.500	.510	.125	GP2C07750
8.000	**7.750**	**.510**	**.125**	**GP2C08000**

Dimensions				TSS Part No.
Bore Diameter	Groove Diameter	Groove Width	Thickness	
D_N H9	d_2 h9	L_2 +.010	W	
8.250	8.000	.510	.125	GP2C08250
8.500	8.250	.510	.125	GP2C08500
8.750	8.500	.510	.125	GP2C08750
9.000	**8.750**	**.510**	**.125**	**GP2C09000**
9.250	9.000	.510	.125	GP2C09250
9.500	9.250	.510	.125	GP2C09500
9.750	9.500	.510	.125	GP2C09750
10.000	**9.750**	**.510**	**.125**	**GP2C10000**
10.500	10.250	.510	.125	GP2C10500
11.000	10.750	.510	.125	GP2C11000
11.500	11.250	.510	.125	GP2C11500
12.000	**11.750**	**.510**	**.125**	**GP2C12000**
4.000	**3.750**	**.760**	**.125**	**GP2E04000**
4.125	3.875	.760	.125	GP2E04125
4.250	4.000	.760	.125	GP2E04250
4.375	4.125	.760	.125	GP2E04375
4.500	**4.250**	**.760**	**.125**	**GP2E04500**
4.625	4.375	.760	.125	GP2E04625
4.750	4.500	.760	.125	GP2E04750
4.875	4.625	.760	.125	GP2E04875
5.000	**4.750**	**.760**	**.125**	**GP2E05000**
5.125	4.875	.760	.125	GP2E05125
5.250	5.000	.760	.125	GP2E05250
5.375	5.125	.760	.125	GP2E05375
5.500	**5.250**	**.760**	**.125**	**GP2E05500**
5.625	5.375	.760	.125	GP2E05625
5.750	5.500	.760	.125	GP2E05750
5.875	5.625	.760	.125	GP2E05875
6.000	**5.750**	**.760**	**.125**	**GP2E06000**
6.250	6.000	.760	.125	GP2E06250
6.500	6.250	.760	.125	GP2E06500
6.750	6.500	.760	.125	GP2E06750
7.000	**6.750**	**.760**	**.125**	**GP2E07000**
7.250	7.000	.760	.125	GP2E07250
7.500	7.250	.760	.125	GP2E07500
7.750	7.500	.760	.125	GP2E07750
8.000	**7.750**	**.760**	**.125**	**GP2E08000**
8.250	8.000	.760	.125	GP2E08250
8.500	8.250	.760	.125	GP2E08500
8.750	8.500	.760	.125	GP2E08750

Dimensions				TSS Part No.
Bore Diameter	Groove Diameter	Groove Width	Thickness	
D_N H9	d_2 h9	L_2 +.010	W	
9.000	**8.750**	**.760**	**.125**	**GP2E09000**
9.250	9.000	.760	.125	GP2E09250
9.500	9.250	.760	.125	GP2E09500
9.750	9.500	.760	.125	GP2E09750
10.000	**9.750**	**.760**	**.125**	**GP2E10000**
10.500	10.250	.760	.125	GP2E10500
11.000	10.750	.760	.125	GP2E11000
11.500	11.250	.760	.125	GP2E11500
12.000	**11.750**	**.760**	**.125**	**GP2E12000**
12.500	12.250	.760	.125	GP2E12500
13.000	12.750	.760	.125	GP2E13000
13.500	13.250	.760	.125	GP2E13500
14.000	**13.750**	**.760**	**.125**	**GP2E14000**
14.500	14.250	.760	.125	GP2E14500
15.000	14.750	.760	.125	GP2E15000
15.500	15.250	.760	.125	GP2E15500
16.000	**15.750**	**.760**	**.125**	**GP2E16000**
16.500	16.250	.760	.125	GP2E16500
17.000	16.750	.760	.125	GP2E17000
17.500	17.250	.760	.125	GP2E17500
18.000	**17.750**	**.760**	**.125**	**GP2E18000**
18.500	18.250	.760	.125	GP2E18500
19.000	18.750	.760	.125	GP2E19000
19.500	19.250	.760	.125	GP2E19500
20.000	**19.750**	**.760**	**.125**	**GP2E20000**
6.000	**5.750**	**1.010**	**.125**	**GP2F06000**
6.250	6.000	1.010	.125	GP2F06250
6.500	6.250	1.010	.125	GP2F06500
6.750	6.500	1.010	.125	GP2F06750
7.000	**6.750**	**1.010**	**.125**	**GP2F07000**
7.250	7.000	1.010	.125	GP2F07250
7.500	7.250	1.010	.125	GP2F07500
7.750	7.500	1.010	.125	GP2F07750
8.000	**7.750**	**1.010**	**.125**	**GP2F08000**
8.250	8.000	1.010	.125	GP2F08250
8.500	8.250	1.010	.125	GP2F08500
8.750	8.500	1.010	.125	GP2F08750
9.000	**8.750**	**1.010**	**.125**	**GP2F09000**
9.250	9.000	1.010	.125	GP2F09250

Dimensions				TSS Part No.
Bore Diameter	Groove Diameter	Groove Width	Thickness	
D_N H9	d_2 h9	L_2 +.010	W	
9.500	9.250	1.010	.125	GP2F09500
9.750	9.500	1.010	.125	GP2F09750
10.000	**9.750**	**1.010**	**.125**	**GP2F10000**
10.500	10.250	1.010	.125	GP2F10500
11.000	10.750	1.010	.125	GP2F11000
11.500	11.250	1.010	.125	GP2F11500
12.000	**11.750**	**1.010**	**.125**	**GP2F12000**
12.500	12.250	1.010	.125	GP2F12500
13.000	12.750	1.010	.125	GP2F13000
13.500	13.250	1.010	.125	GP2F13500
14.000	**13.750**	**1.010**	**.125**	**GP2F14000**
14.500	14.250	1.010	.125	GP2F14500
15.000	14.750	1.010	.125	GP2F15000
15.500	15.250	1.010	.125	GP2F15500
16.000	**15.750**	**1.010**	**.125**	**GP2F16000**
16.500	16.250	1.010	.125	GP2F16500
17.000	16.750	1.010	.125	GP2F17000
17.500	17.250	1.010	.125	GP2F17500
18.000	**17.750**	**1.010**	**.125**	**GP2F18000**
18.500	18.250	1.010	.125	GP2F18500
19.000	18.750	1.010	.125	GP2F19000
19.500	19.250	1.010	.125	GP2F19500
20.000	**19.750**	**1.010**	**.125**	**GP2F20000**

The sizes listed in **bold** font are preferred sizes (more likely to be available for immediate shipment).

Installation Recommendation and Part Numbers HiMod® Slydring® HC - Piston (Inch Series)

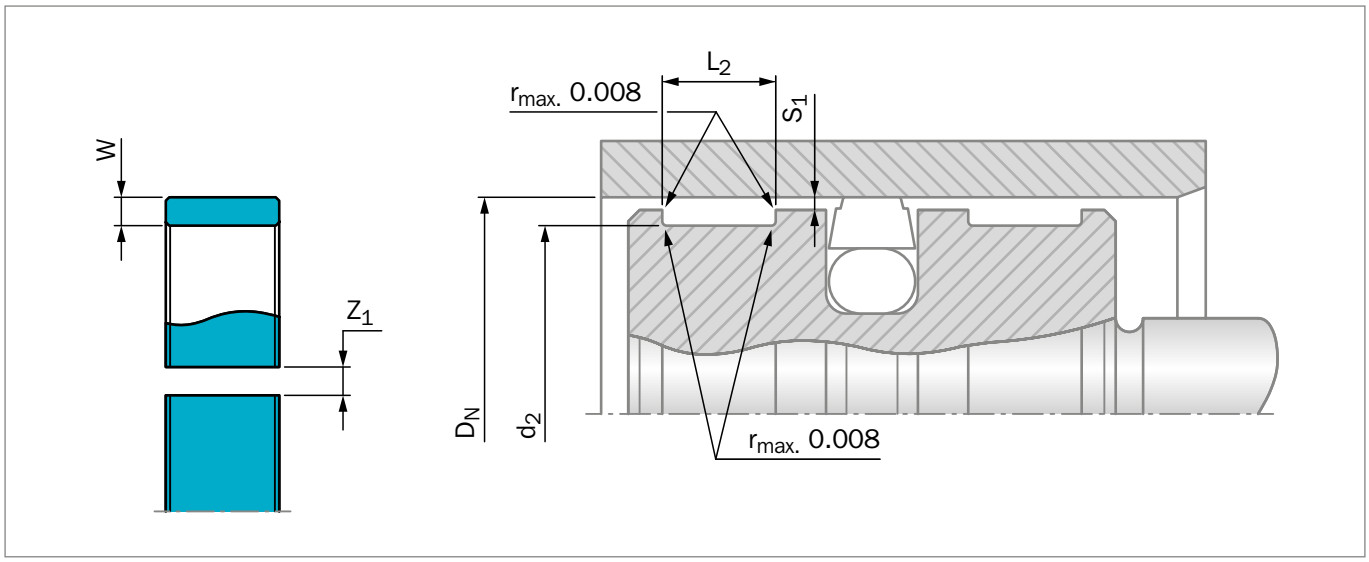

Figure 122: Installation drawing

Table 116: Installation recommendation

TSS Series No.	Bore Diameter	Groove Diameter	Groove Width	Thickness
	D_n H9	**d_2** fh9	**L_2** +.010	**W** (max)
GPJA	1.000 - 4.000	D_n -.250	0.260	0.125
GPJB	1.000 - 6.000	D_n -.250	0.385	0.125
GPJC	1.000 - 12.000	D_n -.250	0.510	0.125
GPJE	1.000 - 12.000	D_n -.250	0.760	0.125
GPJF	1.000 - 12.000	D_n -.250	1.010	0.125
GPJH	6.000 - 12.000	D_n -.250	1.510	0.125
GPJK	6.000 - 12.000	D_n -.250	2.010	0.125

Notes:
(1) Tolerances used are per ISO-286 system of limits and fits.

ORDERING EXAMPLE

Slydring® HC for Bore diameter D_n = 2.000 inches Series GPJC from Table 116

Groove width:	.510 inches
Ring thickness:	.125 inches
Material:	HiMod® HM803 Standard with straight cut
TSS Part No.:	GPJC02000

TSS Article No. **GPJ C 02000 - HM803**

- Slydring© HC Designator — GPJ
- Axial Width — C
- Functional Diameter x 1000 — 02000
- Quality Index (Standard) — -
- Material Code — HM803

G	P	J	A - K	Bore diameter x 1000	-	HM803
G=Slydring	P=Ring	Thickness J=0.125"	Axial Width A=0.250" (1/4) B=0.375" (3/8) C=0.500" (1/2) D=0.750" (3/4) F=1.000" (1) H=1.500" (1 1/2) K=2.000" (2)	Equivalent to Bore (inch to 3 decimal places)	Quality Index (Standard)	Material Code

Installation Recommendation and Part Numbers - Rod (Inch Series)

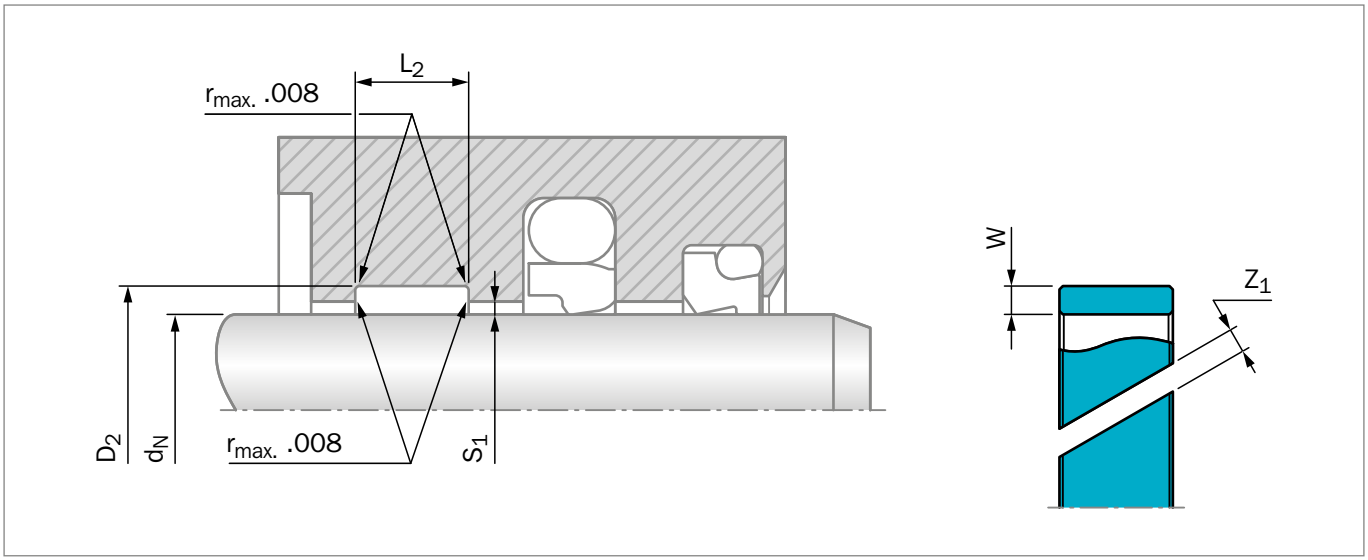

Figure 123: Installation drawing

Table 117: Installation recommendation

TSS Series No.	Rod Diameter	Groove Diameter	Groove Width	Thickness
	d_N h9	**D_2** H9	**L_2** +.010	**W** (max)
GR0B	.750 - 2.500	D_N +.126	.385	.063
GR0C	1.250 - 4.000	D_N +.126	.510	.063
GR2B	1.250 - 4.000	D_N +.250	.385	.125
GR2C	**1.250 - 8.000**	**D_N +.250**	**.510**	**.125**
GR2D	1.500 - 10.000	D_N +.250	.635	.125
GR2E	**2.500 - 12.000**	**D_N +.250**	**.760**	**.125**
GR2F	**3.000 - 16.000**	**D_N +.250**	**1.010**	**.125**
GR2G	3.500 - 20.000	D_N +.250	1.260	.125
GR2H	**4.000 - 20.000**	**D_N +.250**	**1.510**	**.125**
GR2J	6.000 - 20.000	D_N +.250	1.760	.125
GR2K	**8.000 - 20.000**	**D_N +.250**	**2.010**	**.125**
GR2L	10.000 - 20.000	D_N +.250	2.510	.125

Notes:
(1) Tolerances used are per ISO-286 system of limits and fits.
(2) **Bold** Print indicates preferred series

ORDERING EXAMPLE

Slydring® for Rod diameter d_N = 3.250 inches Series GR2C from Table 117

Groove width:	.510 inches
Ring thickness:	.125 inches
Material:	Turcite® T47 Standard with angle cut
TSS Part No.:	GR2C03250 (from Table 118)

TSS Article No. **GR2C 03250 - T47**

- TSS Series No.
- Rod Diameter x 1000
- Quality Index (Standard)
- Material Code

G
- G=Slydring

N,R
- N=Strip
- R=Ring

0 - 5
- 0=.063"
- 1=.094"
- 2=.125"
- 3=.250"
- 5=.157"

A - W
- A =.250" (1/4)
- B =.375" (3/8)
- C =.500" (1/2)
- D =.625" (5/8)
- E =.750" (3/4)
- F =1.000" (1)
- G =1.250" (1 1/4)
- H =1.500" (1 1/2)
- J =1.750" (1 3/4)
- K =2.000" (2)
- L =2.500" (2 1/2)
- M=.125" (1/8)
- N =.188" (3/16)
- P =.313" (5/16)
- R =.438" (7/16)
- S =.563" (9/16)
- T =.688" (11/16)
- U =.813" (13/16)
- T =.688" (11/16)
- U =.813" (13/16)
- V =1.125" (1 1/8)
- W=.875" (7/8)

Rod diameter x 1000
- Equivalent to Rod (inch to 3 decimal places)

-
- Quality Index (Standard)

T47
- T47
- T51
- M12
- Z80
- HM803
- HM852
- HM861
- C320
- C380
- C932

Table 118: Slydring® for Rods

Dimensions				TSS Part No.
Rod Diameter	Groove Diameter	Groove Width	Thickness	
d_N h9	D_2 H9	L_2 +.010	W (Max)	
.750	**.875**	**.510**	**.063**	**GR0C00750**
.875	1.000	.510	.063	GR0C00875
1.000	**1.125**	**.510**	**.063**	**GR0C01000**
1.125	1.250	.510	.063	GR0C01125
1.250	**1.375**	**.510**	**.063**	**GR0C01250**
1.375	1.500	.510	.063	GR0C01375
1.500	**1.625**	**.510**	**.063**	**GR0C01500**
1.625	1.750	.510	.063	GR0C01625
1.750	**1.875**	**.510**	**.063**	**GR0C01750**
1.875	2.000	.510	.063	GR0C01875
2.000	**2.125**	**.510**	**.063**	**GR0C02000**

Dimensions				TSS Part No.
Rod Diameter	Groove Diameter	Groove Width	Thickness	
d_N h9	D_2 H9	L_2 +.010	W (Max)	
1.250	**1.500**	**.510**	**.125**	**GR2C01250**
1.313	1.563	.510	.125	GR2C01313
1.375	**1.625**	**.510**	**.125**	**GR2C01375**
1.438	1.688	.510	.125	GR2C01438
1.500	**1.750**	**.510**	**.125**	**GR2C01500**
1.563	1.813	.510	.125	GR2C01563
1.625	**1.875**	**.510**	**.125**	**GR2C01625**
1.688	1.938	.510	.125	GR2C01688
1.750	**2.000**	**.510**	**.125**	**GR2C01750**
1.813	2.063	.510	.125	GR2C01813
1.875	**2.125**	**.510**	**.125**	**GR2C01875**
1.938	2.188	.510	.125	GR2C01938
2.000	**2.250**	**.510**	**.125**	**GR2C02000**
2.125	2.375	.510	.125	GR2C02125
2.250	**2.500**	**.510**	**.125**	**GR2C02250**
2.375	2.625	.510	.125	GR2C02375
2.500	**2.750**	**.510**	**.125**	**GR2C02500**
2.626	2.876	.510	.125	GR2C02626
2.750	**3.000**	**.510**	**.125**	**GR2C02750**
2.875	3.125	.510	.125	GR2C02875
3.000	**3.250**	**.510**	**.125**	**GR2C03000**
3.125	3.375	.510	.125	GR2C03125
3.250	**3.500**	**.510**	**.125**	**GR2C03250**
3.375	3.625	.510	.125	GR2C03375
3.500	**3.750**	**.510**	**.125**	**GR2C03500**
3.625	3.875	.510	.125	GR2C03625
3.750	**4.000**	**.510**	**.125**	**GR2C03750**
3.875	4.125	.510	.125	GR2C03875
4.000	**4.250**	**.510**	**.125**	**GR2C04000**
4.125	4.375	.510	.125	GR2C04125
4.250	**4.500**	**.510**	**.125**	**GR2C04250**
4.375	4.625	.510	.125	GR2C04375
4.500	**4.750**	**.510**	**.125**	**GR2C04500**
4.625	4.875	.510	.125	GR2C04625
4.750	5.000	.510	.125	GR2C04750
4.875	5.125	.510	.125	GR2C04875
5.000	**5.250**	**.510**	**.125**	**GR2C05000**
5.125	5.375	.510	.125	GR2C05125
5.250	5.500	.510	.125	GR2C05250
5.375	5.625	.510	.125	GR2C05375
5.500	**5.750**	**.510**	**.125**	**GR2C05500**

Dimensions				TSS Part No.
Rod Diameter	Groove Diameter	Groove Width	Thickness	
d_N h9	D_2 H9	L_2 +.010	W (Max)	
5.625	5.875	.510	.125	GR2C05625
5.750	6.000	.510	.125	GR2C05750
5.875	6.125	.510	.125	GR2C05875
6.000	**6.250**	**.510**	**.125**	**GR2C06000**
6.250	6.500	.510	.125	GR2C06250
6.500	6.750	.510	.125	GR2C06500
6.750	7.000	.510	.125	GR2C06750
7.000	**7.250**	**.510**	**.125**	**GR2C07000**
7.250	7.500	.510	.125	GR2C07250
7.500	7.750	.510	.125	GR2C07500
7.750	8.000	.510	.125	GR2C07750
8.000	**8.250**	**.510**	**.125**	**GR2C08000**
8.250	8.500	.510	.125	GR2C08250
8.500	8.750	.510	.125	GR2C08500
8.750	9.000	.510	.125	GR2C08750
9.000	**9.250**	**.510**	**.125**	**GR2C09000**
9.250	9.500	.510	.125	GR2C09250
9.500	9.750	.510	.125	GR2C09500
9.750	10.000	.510	.125	GR2C09750
10.000	**10.250**	**.510**	**.125**	**GR2C10000**
10.500	10.750	.510	.125	GR2C10500
11.000	11.250	.510	.125	GR2C11000
11.500	11.750	.510	.125	GR2C11500
12.000	**12.250**	**.510**	**.125**	**GR2C12000**
4.000	**4.250**	**.760**	**.125**	**GR2E04000**
4.125	4.375	.760	.125	GR2E04125
4.250	4.500	.760	.125	GR2E04250
4.375	4.625	.760	.125	GR2E04375
4.500	**4.750**	**.760**	**.125**	**GR2E04500**
4.625	4.875	.760	.125	GR2E04625
4.750	5.000	.760	.125	GR2E04750
4.875	5.125	.760	.125	GR2E04875
5.000	**5.250**	**.760**	**.125**	**GR2E05000**
5.125	5.375	.760	.125	GR2E05125
5.250	5.500	.760	.125	GR2E05250
5.375	5.625	.760	.125	GR2E05375
5.500	**5.750**	**.760**	**.125**	**GR2E05500**
5.625	5.875	.760	.125	GR2E05625
5.750	6.000	.760	.125	GR2E05750
5.875	6.125	.760	.125	GR2E05875

Dimensions				TSS Part No.
Rod Diameter	Groove Diameter	Groove Width	Thickness	
d_N h9	D_2 H9	L_2 +.010	W (Max)	
6.000	**6.250**	**.760**	**.125**	**GR2E06000**
6.250	6.500	.760	.125	GR2E06250
6.500	6.750	.760	.125	GR2E06500
6.750	7.000	.760	.125	GR2E06750
7.000	**7.250**	**.760**	**.125**	**GR2E07000**
7.250	7.500	.760	.125	GR2E07250
7.500	7.750	.760	.125	GR2E07500
7.750	8.000	.760	.125	GR2E07750
8.000	**8.250**	**.760**	**.125**	**GR2E08000**
8.250	8.500	.760	.125	GR2E08250
8.500	8.750	.760	.125	GR2E08500
8.750	9.000	.760	.125	GR2E08750
9.000	**9.250**	**.760**	**.125**	**GR2E09000**
9.250	9.500	.760	.125	GR2E09250
9.500	9.750	.760	.125	GR2E09500
9.750	10.000	.760	.125	GR2E09750
10.000	**10.250**	**.760**	**.125**	**GR2E10000**
10.500	10.750	.760	.125	GR2E10500
11.000	11.250	.760	.125	GR2E11000
11.500	11.750	.760	.125	GR2E11500
12.000	**12.250**	**.760**	**.125**	**GR2E12000**
12.500	12.750	.760	.125	GR2E12500
13.000	13.250	.760	.125	GR2E13000
13.500	13.750	.760	.125	GR2E13500
14.000	**14.250**	**.760**	**.125**	**GR2E14000**
14.500	14.750	.760	.125	GR2E14500
15.000	15.250	.760	.125	GR2E15000
15.500	15.750	.760	.125	GR2E15500
16.000	**16.250**	**.760**	**.125**	**GR2E16000**
16.500	16.750	.760	.125	GR2E16500
17.000	17.250	.760	.125	GR2E17000
17.500	17.750	.760	.125	GR2E17500
18.000	**18.250**	**.760**	**.125**	**GR2E18000**
18.500	18.750	.760	.125	GR2E18500
19.000	19.250	.760	.125	GR2E19000
19.500	19.750	.760	.125	GR2E19500
20.000	**20.250**	**.760**	**.125**	**GR2E20000**
6.000	**6.250**	**1.010**	**.125**	**GR2F06000**
6.250	6.500	1.010	.125	GR2F06250
6.500	6.750	1.010	.125	GR2F06500

Dimensions				TSS Part No.
Rod Diameter	Groove Diameter	Groove Width	Thickness	
d_N h9	D_2 H9	L_2 +.010	**W** (Max)	
6.750	7.000	1.010	.125	GR2F06750
7.000	**7.250**	**1.010**	**.125**	**GR2F07000**
7.250	7.500	1.010	.125	GR2F07250
7.500	7.750	1.010	.125	GR2F07500
7.750	8.000	1.010	.125	GR2F07750
8.000	**8.250**	**1.010**	**.125**	**GR2F08000**
8.250	8.500	1.010	.125	GR2F08250
8.500	8.750	1.010	.125	GR2F08500
8.750	9.000	1.010	.125	GR2F08750
9.000	**9.250**	**1.010**	**.125**	**GR2F09000**
9.250	9.500	1.010	.125	GR2F09250
9.500	9.750	1.010	.125	GR2F09500
9.750	10.000	1.010	.125	GR2F09750
10.000	**10.250**	**1.010**	**.125**	**GR2F10000**
10.500	10.750	1.010	.125	GR2F10500
11.000	11.250	1.010	.125	GR2F11000
11.500	11.750	1.010	.125	GR2F11500
12.000	**12.250**	**1.010**	**.125**	**GR2F12000**
12.500	12.750	1.010	.125	GR2F12500
13.000	13.250	1.010	.125	GR2F13000
13.500	13.750	1.010	.125	GR2F13500
14.000	**14.250**	**1.010**	**.125**	**GR2F14000**
14.500	14.750	1.010	.125	GR2F14500
15.000	15.250	1.010	.125	GR2F15000
15.500	15.750	1.010	.125	GR2F15500
16.000	**16.250**	**1.010**	**.125**	**GR2F16000**
16.500	16.750	1.010	.125	GR2F16500
17.000	17.250	1.010	.125	GR2F17000
17.500	17.750	1.010	.125	GR2F17500
18.000	**18.250**	**1.010**	**.125**	**GR2F18000**
18.500	18.750	1.010	.125	GR2F18500
19.000	19.250	1.010	.125	GR2F19000
19.500	19.750	1.010	.125	GR2F19500
20.000	**20.250**	**1.010**	**.125**	**GR2F20000**

The sizes listed in **bold** font are preferred sizes (more likely to be available for immediate shipment).

Radial sealing

For O-Ring grooves

Material:
Zurcon®

Dualseal

Description

In current hydraulic cylinder design, O-Ring or O-Ring/Back-up Ring combinations are mainly used as static seals. However, this sealing solution hides the risk that during assembly the O-Ring may become twisted and that the position of the Back-up Ring is not optimal. This solution also exhibits weaknesses with regard to pressure pulsation and the ingress of dirt.

The Dualseal as a single component static hydraulic seal offers a good alternative in such cases.

Table 119: Surface finish

Type of load	Surface	Rt (µin)	Rz (µin)	Ra (µin)
Radial-static	Mating surface	≤394		≤63
	Groove surface (groove diameter, groove flanks)	≤630	≤248	≤126

LEAD-IN CHAMFERS

Groove depth < .12 inches (3 mm) → .12 inches x 15° (3 mm x 15°)
Groove depth > .12 inches (3 mm) → .20 inches x 15° (5 mm x 15°)

PREFERRED SEALING GAP

Bore H8
Gland g6

Due to the high extrusion resistance of the seal a radial sealing gap (S) of .008 inches (0.2 mm) can be realized.

In case of low temperature applications deviations of the gland to the bore and rod should be avoided.

TECHNICAL DATA

Operating pressure:	Max. 7,500 psi (Max. 50 MPa)
Operating temperature:	-31 °F to +230 °F (-35 °C to +110 °C)

IMPORTANT NOTE

The application limits for pressure and temperature given in this catalogue are maximum values.
During practical applications it should be remembered that due to the interaction of operating parameters the maximum values must be set correspondingly lower.

MATERIAL

Standard material: Zurcon® Z20 polyurethane 93 shore A, turquoise. Suitable for all HL and HLP hydraulic fluids.

ADVANTAGES

Compared with the O-Ring / Back-up Ring combination, the Dualseal offers the following advantages:

- High resistance to twisting
- Easy assembly
- Long service life
- High extrusion resistance

APPLICATIONS

The Dualseal allows general use in hydraulic cylinders:

- Fork lifts
- Mobile hydraulics
- Industrial hydraulics
- Machine tools
- Injection molding machines
- Hydraulic presses
- Cartridge valves

Dualseal performs leak-free and is highly extrusion resistant under the following test conditions:

Table 120: Test Conditions

	High pressure test	Pressure pulsation test
Pressure P	6,000 / 7,800 psi (40 / 52 MPa)	4,500 psi (30 MPa)
Temperature T	212 °F / 176 °F (100 °C / 80 °C)	140 °F (60 °C (max. tank temperature))
Medium	Hydraulic oil HLP 46	Hydraulic oil HLP 46
Test duration	72 h	500,000 Pressure pulsations

Installation Recommendation (Inch Series)

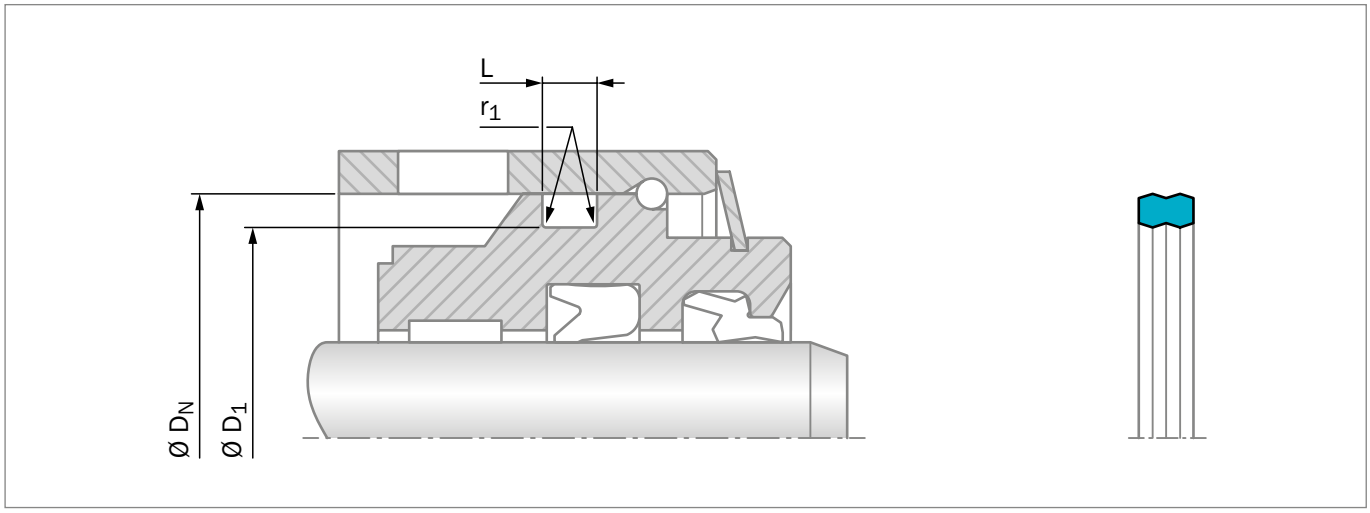

Figure 124: Installation drawing

Table 121: Installation dimensions / TSS Article No.

ASTM AS568	Bore Diameter	Groove Diameter	Groove Width	Radius	TSS Article No.
Size	**D_N** H9	**D_1** h9	**L** +.008	**r_1 max.**	
117	1.000	.838	.140	.020	DUB001000-Z20
121	1.250	1.088	.140	.020	DUB001250-Z20
125	1.500	1.338	.140	.020	DUB001500-Z20
129	1.750	1.588	.140	.020	DUB001750-Z20
133	2.000	1.838	.140	.020	DUB002000-Z20
137	2.250	2.088	.140	.020	DUB002250-Z20
141	2.500	2.338	.140	.002	DUB002500-Z20
232	3.000	2.778	.187	.020	DUC003000-Z20
234	3.250	3.028	.187	.020	DUC003250-Z20
236	3.500	3.278	.187	.020	DUC003500-Z20
238	3.750	3.528	.187	.020	DUC003750-Z20
240	4.000	3.778	.187	.020	DUC004000-Z20
242	4.250	4.028	.187	.020	DUC004250-Z20
244	4.500	4.278	.187	.020	DUC004500-Z20
246	4.750	4.528	.187	.020	DUC004750-Z20
248	5.000	4.778	.187	.020	DUC005000-Z20
250	5.250	5.028	.187	.020	DUC005250-Z20
354	5.500	5.160	.281	.020	DUD005500-Z20
358	6.000	5.660	.281	.020	DUD006000-Z20
117	**1.000**	**.838**	**.171**	**.020**	**DUB101000-Z20**
121	**1.250**	**1.088**	**.171**	**.020**	**DUB101250-Z20**
125	**1.500**	**1.338**	**.171**	**.020**	**DUB101500-Z20**

ASTM AS568	Bore Diameter	Groove Diameter	Groove Width	Radius	TSS Article No.
Size	D_N H9	D_1 h9	L +.008	r_1 max.	
129	**1.750**	**1.588**	**.171**	**.020**	**DUB101750-Z20**
133	**2.000**	**1.838**	**.171**	**.020**	**DUB102000-Z20**
137	**2.250**	**2.088**	**.171**	**.020**	**DUB102250-Z20**
141	**2.500**	**2.338**	**.171**	**.020**	**DUB102500-Z20**
232	**3.000**	**2.778**	**.208**	**.020**	**DUC103000-Z20**
234	**3.250**	**3.028**	**.208**	**.020**	**DUC103250-Z20**
236	**3.500**	**3.278**	**.208**	**.020**	**DUC103500-Z20**
238	**3.750**	**3.528**	**.208**	**.020**	**DUC103750-Z20**
240	**4.000**	**3.778**	**.208**	**.020**	**DUC104000-Z20**
242	**4.250**	**4.028**	**.208**	**.020**	**DUC104250-Z20**
244	**4.500**	**4.278**	**.208**	**.020**	**DUC104500-Z20**
246	**4.750**	**4.528**	**.208**	**.020**	**DUC104750-Z20**
248	**5.000**	**4.778**	**.208**	**.020**	**DUC105000-Z20**
250	**5.250**	**5.028**	**.208**	**.020**	**DUC105250-Z20**
354	**5.500**	**5.160**	**.311**	**.020**	**DUD105500-Z20**
358	**6.000**	**5.660**	**.311**	**.020**	**DUD106000-Z20**

The sizes listed in **bold** font are preferred sizes (more likely to be available for immediate shipment).

VERSION NO. 99USGOCATHN1217